HEATRAESADIA

SMARTER I CLEANER I WARMER

Electromax Combined Electric Flow Boiler and Direct Unvented Hot Water Cylinder Installation and Servicing Instructions

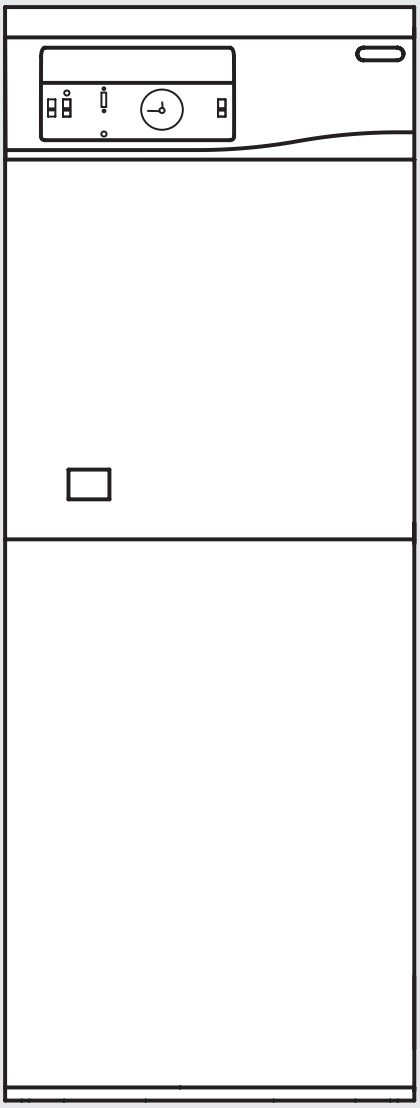

Important

Please read & understand all these instructions before commencing installation.

Please leave this manual with the customer for future reference

Contents

SECTION	PAGE
1.0 Introduction	
1.1 Important Notes	3
1.2 Basic Operation of the Electromax	3
1.3 Storage, Unpacking and Handling	4
1.4 Contents Check List	4
2.0 Technical Data	5
3.0 General Requirements	
3.1 Location of the Electromax	11
3.2 Water Supply	11
3.3 Pipework, Fittings and Outlet/ Terminal Fittings	12
3.4 Treatment of the Primary (Central Heating) Circulating System	12
3.5 Sealed Primary Systems	13
4.0 Installation - General	
4.1 Positioning the Electromax	14
4.2 Removal of Panels	14
4.3 Cable Entry Positions	15
4.4 Programmable Room Thermostat	15
5.0 Installation - Plumbing	
5.1 Pipe Fittings	16
5.2 Cold Water Combination Valve	16
5.3 Secondary Expansion Vessel	16
5.4 Balanced Cold Water Supplies	17
5.5 Outlet Pipework	17
5.6 Secondary Circulation	17
5.7 Discharge Pipework	17
5.8 Primary (Central Heating) Pipework	21
6.0 Installation - Electrical	
6.1 Important Notes	22
6.2 Off Peak and 24 Hour Electrical Supply	22
6.3 Boiler Connection	24
6.4 Programmable Room Thermostat	24

SECTION	PAGE
7.0 Commissioning	
7.1 Filling the Electromax Cylinder	25
7.2 Filling the Sealed System Primary Circuit	26
7.3 Check the Operation of the Safety Valves	26
7.4 Set the Programmable Room Thermostat	27
7.5 Preliminary Electrical Checks	27
7.6 Check Operation of the Electric Boiler	27
7.7 Setting the Automatic By-pass Valve	28
7.8 Check Operation of the Immersion Heaters	29
7.9 Demonstration to User	29
7.10 Benchmark	29
8.0 Maintenance	
8.1 Maintenance Requirements	30
8.2 Check Cylinder Water Supply	30
8.3 Descaling Immersion Heaters	30
8.4 Operation of Cylinder Safety Valves	31
8.5 Operation of Primary System Safety Valve	32
8.6 Primary System Expansion Vessel Charge Pressure	32
8.7 Electrical Checks	32
9.0 Fault Finding and Servicing	
9.1 Fault Finding	33
9.2 Replacement Parts	37
9.3 Servicing	39
10.0 Guarantee	45
11.0 Spares Stockists	48

1.0 Introduction

1.1 Important Notes

The Electromax must be installed in accordance with the manufacturer's instructions and all relevant regulations in force at the time of installation.

This appliance is not intended for use by persons (including children) with reduced physical, sensory or mental capabilities, or lack of knowledge and experience, unless they have been given supervision or instruction concerning the use of the appliance by a person responsible for their safety.

The Electromax Domestic Hot Water Cylinder is of the UNVENTED type. Its installation is subject to Building Regulation G3 (England and Wales), Technical Standard P3 (Scotland) or Building Regulation P5 (Northern Ireland). Installation must be carried out by a competent person.

The Electromax should be installed and maintained by a competent person. Please read and understand these instructions before installing the Electromax. Following installation and commissioning the operation of the Electromax, the central heating system and associated controls should be explained to the customer and these instructions left with the end user for future reference.

The Electromax electric heating boiler must be installed into a sealed (pressurised) primary system. Following installation of the primary system the system should be flushed in accordance with BS 7593 and an inhibitor added.

The Electromax Domestic Hot Water cylinder is directly heated by means of electric immersion heaters. The electric central heating boiler although housed in the same casing operates completely independently to the cylinder. It is strongly recommended that the water heating is done by means of an Off-Peak electrical supply.

The use of an Off-Peak tariff that provides at least three off peak electricity periods, such as Economy 10, is recommended. Where possible the central heating "on" periods should be programmed to coincide with the off peak electricity periods available during the day. This will ensure maximum economy of the system.

The Electromax does not contain any substances harmful to health; it does not contain any asbestos. Small quantities of adhesives and sealants used in the manufacture of the product are cured and present no known hazards.

1.2 Basic operation of the Electromax

The Electromax is an integrated electric flow boiler and direct electrically heated unvented domestic water heating cylinder.

The domestic hot water is preferentially heated by an Off Peak electricity supply via an immersion heater that is specially designed to heat virtually the complete cylinder capacity. A "Boost" immersion heater is also provided to allow a smaller quantity of water to be heated should the stored hot water be fully used during the day. The cylinder is factory insulated with a low heat loss expanded polyurethane foam.
The electric flow boiler must be installed into a sealed (pressurised) primary system. It is suitable for conventional radiator based central heating systems & underfloor heating systems when using underfloor controls and is supplied fitted with all necessary primary sealed system functional and safety controls, including the circulating pump and primary expansion vessel. The boiler automatically responds to lower central heating loads by reducing (modulating) the boiler output which saves wasteful on-off cycling. For summer use the boiler can be switched off on the

Electromax control panel, however a "pump exercise" facility will energise the circulating pump for a brief period every day to prevent pump seizure through long periods without use.

Time and temperature control of the central heating is by means of a Programmable Room Thermostat which is supplied loose with the Electromax for remote siting in a suitable, convenient position.

The necessary cold water mains supply controls are supplied in a kit for installation on site in a suitable, convenient position. These must be fitted to comply with Building Regulation G3 and Water Fittings Regulations or Byelaws.

1.3 Storage, Unpacking and Handling

The Electromax is delivered in protective expanded polystyrene packaging with reinforced corner posts. The assembly is shrunk wrapped in heavy duty polythene. The Electromax unvented fitting kit is supplied boxed and attached to the main assembly by 2 polypropylene bands. The assembly must be stored upright, under cover in dry conditions.

Units must not be stacked. The packaging must be removed prior to installation.

Note the weight of the product (Page 5) and the handling instructions applied to the packaging. If using a handling device, eg. a sack barrow, to manually move the Electromax, trucking must be done from the rear to avoid damage to the outer panels.

The Electromax should be lifted and handled by two persons. Handholds are provided in the top rear panel, in both side panels and underneath the Electromax assembly to aid lifting. Stooping should be avoided and protective clothing worn when necessary.

The packaging is recyclable and should be disposed of in accordance with environmental guidelines.

1.4 Contents check list

Within the Electromax packaging the following components are supplied. Please check that all parts are available before commencing installation.

- Electromax unit
- Cold water combination valve comprising pressure reducing valve, strainer, check valve and expansion valve
- Unvented system expansion vessel (18 litre, pre-charged to 3.5 bar)
- Wall mounting bracket for expansion vessel
- Programmable room thermostat
- Immersion heater key spanner
- Hose connection adaptor for primary system drain valve
- Set of cable entry glands and blanking plugs (3 x 20mm, 1 x 25.4mm)
- Installation manual
- User instructions
- Fitting template

The HWA Charter Statement requires that all members adhere to the following:

- To supply fit for purpose products clearly and honestly described.
- To supply products that meet, or exceed appropriate standards and building and water regulations.
- To provide pre and post sales technical support.
- To provide clear and concise warranty details to customers.

2.0 Technical Data

Specification / feature

Electric boiler & primary circuit	
Electrical input (max)	9kW @ 240Vac 50Hz or 6kW @ 240Vac 50Hz
	8.3kW @ 230Vac 50Hz or 5.5kW @ 230Vac 50Hz
Electrical supply voltage	220 - 240 Vac
Electrical supply frequency	50Hz
Electrical supply rating	37.5 Amps @ 240Vac
RCD rating	45 Amps. Trip rating 30mA
Internal fuse rating	2 Amps
Primary system type	Sealed
Primary system operating pressure minimum	0.1 MPa (1 bar)
Primary system operating pressure	0.2 MPa (2 bar)
Primary system maximum design pressure	0.6 MPa (6 bar)
Primary system pressure relief valve setting	0.3 MPa (3 bar)
Primary system expansion vessel	12 litre pre-charged to 0.1MPa (1bar)
Primary flow temperature radiator model	Adjustable from 65°C to 85°C
Primary flow temperature underfloor model	adjustable from 30°C to 60°C
Automatic bypass valve	Supplied fitted. Adjustable 0.01 - 0.05 MPa (0.1 - 0.5bar) differential pressure
Primary crculating pump	Supplied fitted. Grundfos UPM3 AUTO L 15-70 130
Automatic air vent	Supplied fitted
Temporary filling loop	Supplied fitted

DHW cylinder	
Off peak immersion heater input	3kW @ 240Vac 50Hz or 2.8kW @ 230Vac 50Hz
Boost immersion heater imput	3kW @ 240Vac 50Hz or 2.8kW @ 230Vac 50Hz
Rated Pressure	0.6MPa (6bar)
Operating pressure	0.35 MPa (3.5 bar)
Maximum design pressure	1.6 MPa (16 bar)
Pressure reducing valve	0.35MPa (3.5 bar). integral with cold water combination valve
Expansion Valve	0.6MPa (6 bar). integral with cold water combination valve
DHW expansion vessel	18 litre. pre-charged to 0.35MPa (3.5 bar)
Temperature and Pressure relief valve	90°C / 1.0MPa (10 bar). RWC - PTEM550853
Combined thermostat and thermal cut-out	Thermostat adjustable 10°C to 70°C. re-settable cut out @ 83°C
Check valve	Integral with cold water combination valve
Strainer	Integral with cold water combination valve
Insulation	CFC / HCFC expanded polurethane. Ozone depletion potential: 0 Global warming potential: 3.1

Complete unit	
Unit Weight (empty)	74 kg
Unit weight (full)	256 kg
Packaged weight	81 kg
packaged dimensions HxWxD (mm)	Electromax unit: 1566 x 600 x 650 Installation kit: 320 x 315 x 610

Cylinder performance

Capacity (litres)	Off peak heater 3kW time to heat (mins)		Boost heater 3kW Quantity heated though 45° in 60 mins	Heatloss kWh/24hr
	15°C to 60°C temperature rise	50°C temperature differential		
180	180	200	57 litres	1.95

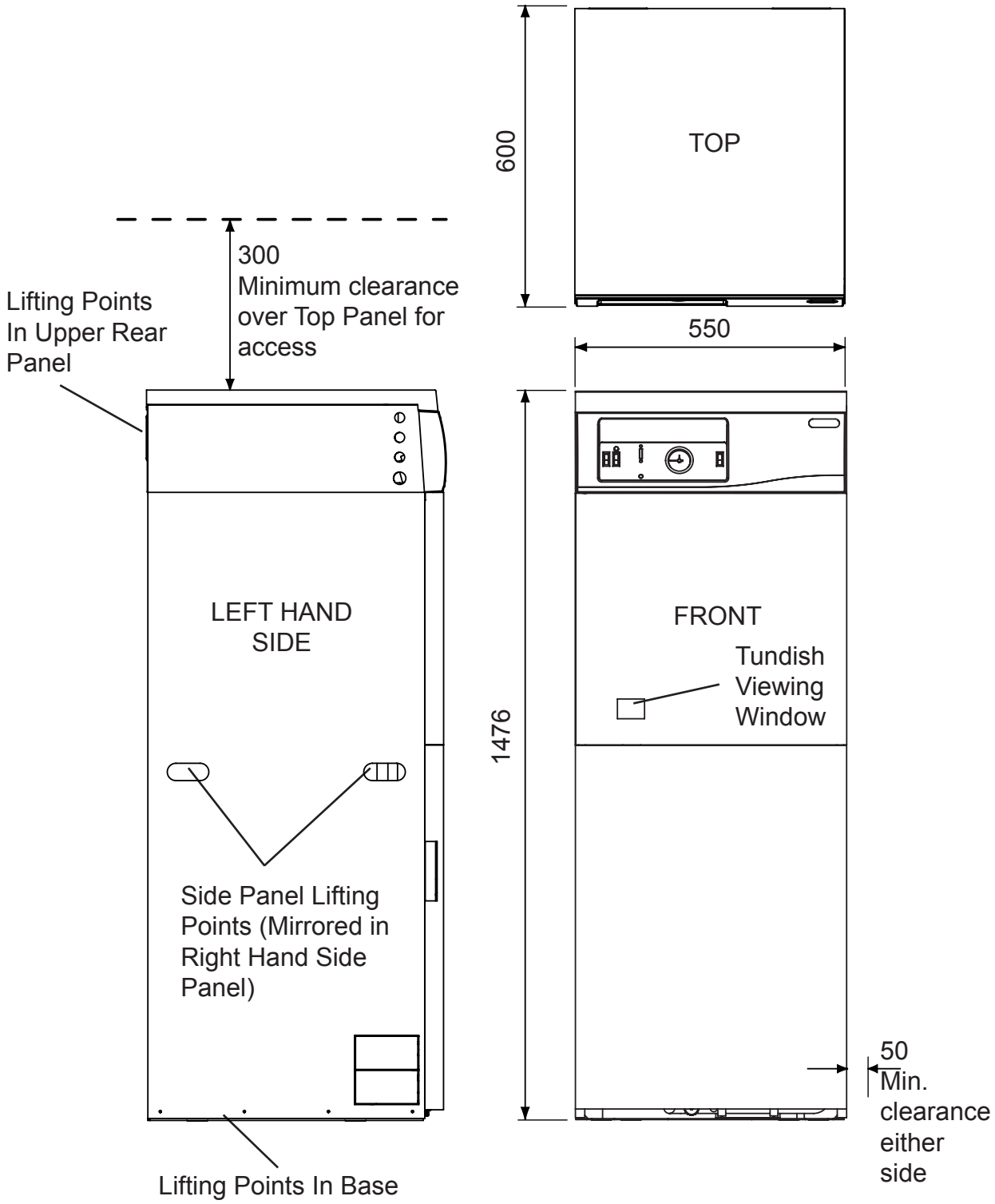

Diagram 1 Dimensions

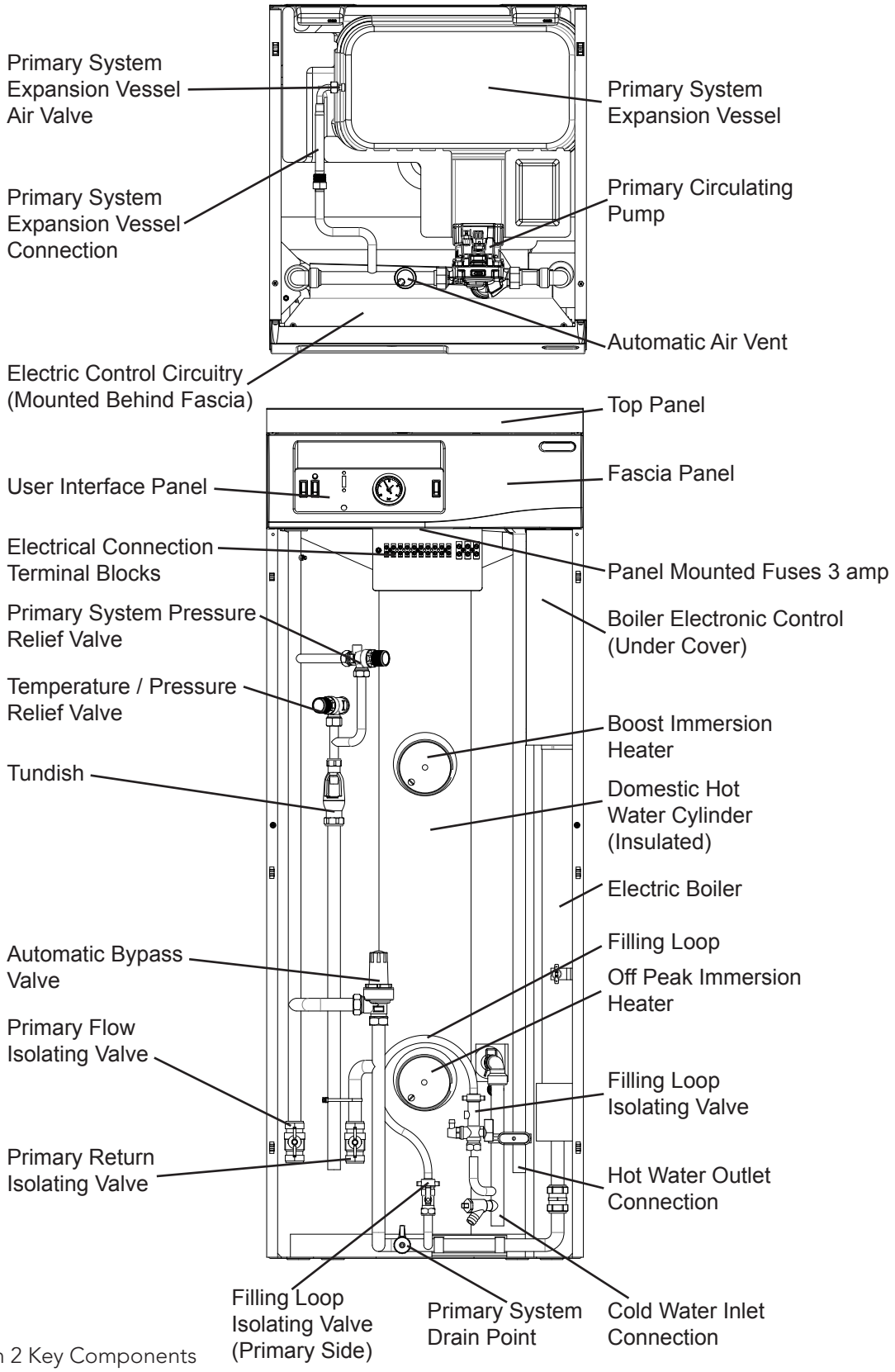

Diagram 2 Key Components

Setting up the UPM3 pump

When you switch on the pump it will run to the pre-set position or the last setting. The diagram below shows the current operation status.

To change the pump stting, follow below:

(a) Press the '⊙' to switch to the settings view. The LEDs show the current setting for 2 seconds.

(b) Release '⊙' for more than 2 seconds. The user interface shows the current performance in "operation status".

(c) Press '⊙' for more than 2 seconds and the circulator switches to "setting selection". The LEDs flash and show the current setting mode. Please note that if the key lock is disabled, the circulator will not switch to "setting selection". In this case, unlock the key lock by pressing the button for 10 seconds.

(d) During a period of 10 seconds, press shortly on the '⊙' and the pump switches to the next setting.

(e) To select between the settings, instantly press the button until you find the setting you want. If you pass the setting, you will need to continue until the setting appears again. It is not possible to go back.

(f) Release '⊙' for more than 10 seconds and the user interface switches back to the performance view and the last setting is stored.

(g) Press '⊙' and the display switches to the setting view and the LEDs show the current setting for 2 seconds.

(h) Release '⊙' for more than 2 seconds and the user interface switches back to the performance view.

Control Mode explanation

Proportional pressure

The head pressure is reduced at falling heat demand and increased at rising heat demand.
The duty point of the circulator will move up or down on the selected proportional pressure curve depending on the heat demand in the system.

- PP1: Lowest proportional pressure curve

- PP2: Intermediate proportional pressure curve

- PP3: Highest proportional pressure curve

Constant pressure

The head pressure is kept constant, irrespective of the heat demand.
The duty point of the circulator will move out or in on the selected constant pressure curve, depending on the heat demand in the system.

- PP1: Lowest constant pressure curve

- PP2: Intermediate constant pressure curve

- PP3: Highest constant pressure curve

Constant curve

The circulator runs on a constant curve, which means that it runs at a constant speed or power.

The duty point of the circulator moves up or down the selected curve, depending on the heat demand in the system.

Constant Curve	
CC1	4 m
CC2	5 m
CC3	6 m
CC4 (max.)	7 m

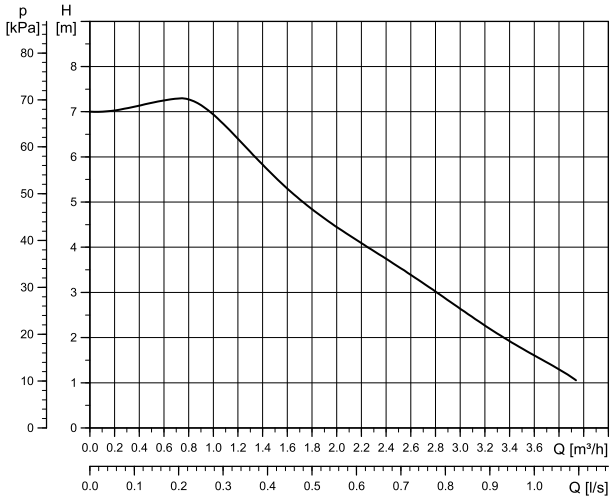

Product name	Electromax			
Supplier's model identifier	6kW standard	6kW underfloor	9kW Standard	9kW underfloor
Storage volume V in litres	180	180	180	180
Mixed water at 40 °C V40 in litres	286	286	286	286
The declared load profile	L	L	L	L
The water heating energy efficiency class of the model	C	C	C	C
The water heating energy efficiency in %	37.9	37.9	37.9	37.9
The annual electricity consumption in kWh	2701	2701	2701	2701
Daily fuel consumption Q fuel in kWh	12.490	12.490	12.490	12.490
The thermostat temperature settings of the water heater, as placed on the market by the supplier	60°C			
Tested for off peak use	Yes			
Specific precautions that shall be taken when the water heater is assembled, installed or maintained and disposed of at end of life	See Section 4 to 10			

Table: Technical parameters in accordance with European Commission regulations 814/2013 and 812/2013

Product name			Electromax			
Supplier's model identifier			6kW standard	6kW underfloor	9kW Standard	9kW underfloor
Electric boiler space heater			Yes	Yes	Yes	Yes
Rated heat output	Prated	kW	6	6	9	9
Useful heat output at rated heat output and high temperature regime (2)	P4	kW	5.9	5.9	8.8	8.8
Useful heat output at 30% of rated heat output and low temperature regime (1)	P1	kW	1.9	1.9	2.8	2.8
Seasonal space heating energy efficiency	η s	%	37	37	37	37
Useful efficiency at rated heat output and high temperature regime (2)	η 4	%	100	100	100.6	100.6
Useful efficiency at 30% of rated heat output and low temperature regime	η 1	%	101	101	100.7	100.7
Auxiliary electricity consumption						
Full load	elmax	kW	N/A	N/A	N/A	N/A
Part load	elmin	kW	N/A	N/A	N/A	N/A
Standby mode	P SB	kW	0.001	0.001	0.001	0.001
Other items						
Standby heat loss	Pstby	kW	0.008	0.008	0.008	0.008
Annual energy consumption	Q HE	kWh	12986	12986	19472	19472
(1) low temperature means for condensing boilers 30oC, for low temperature boilers 37oC and for other heaters 50oC return temperature (2) High temperature regime means 60oC return temperature at heater inlet and 80oC feed temperature at heater outlet						
Note: Annual energy consumption stated under nominal power. Annual energy consumptions calculated using Useful Heat Output are as						
	Q	kWh	12726	12726	19016	19016

Product name			Electromax			
Supplier's model identifier			6kW standard	6kW underfloor	9kW Standard	9kW underfloor
Seasonal space heating energy efficiency class			D	D	D	D
Rated heat output	Prated	kW	6	6	9	9
Seasonal space heating energy efficiency	η s	%	37	37	37	37
Annual energy consumption	Q HE	kWh	12986	12986	19472	19472

Table: Technical parameters in accordance with European Commission regulations 811/2013 and 813/2013

Diagram 4 Automatic Bypass Valve Characteristics

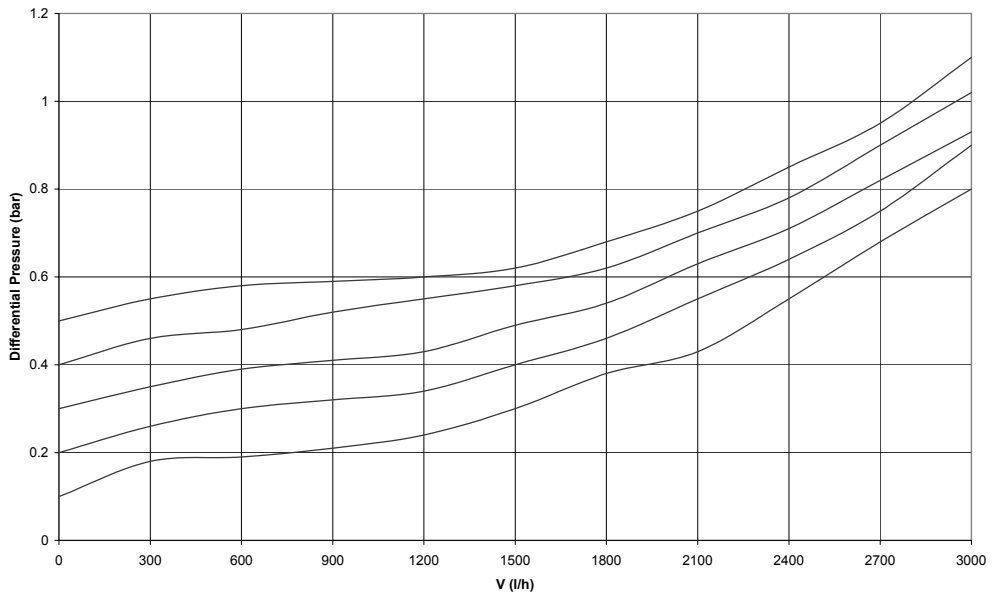

Diagram 4 Automatic Bypass Valve Characteristics

3.0 General Requirements

3.1 Location of the Electromax

The Electromax must not be sited outside or in any location where it could be exposed to the weather. It must be installed in a dry and frost free environment.

The Electromax must be vertically mounted on a flat, level surface capable of supporting the "full" weight of the unit. When full the unit weighs a total of 256kg.

The location chosen must allow the discharge pipe from the unvented cylinder safety valves to be correctly installed. Domestic hot water pipe runs should be kept as short as possible for maximum economy. Sufficient access must be allowed around the unit to allow removal of the front and top panels for servicing and maintenance of the system. Refer to diagram 1, page 6 for details of recommended minimum clearances.

An installation template is supplied with the unit to aid in location and layout of pipework connections.

3.2 Water supply

Bear in mind that the mains water supply to the property will be supplying both the hot and cold water requirements simultaneously. It is recommended that the maximum water demand be assessed and the water supply be checked to ensure this demand can be satisfactorily met.

NOTE: A high mains water pressure will not always guarantee high flow rates.

Wherever possible the mains water supply pipe should be in 22mm OD (copper) or 25mm OD (Blue MDPE). The minimum mains water supply requirements should be 1.0 bar and 20 litres per minute flowrate. At these values outlet flowrates may be poor if several outlets are used simultaneously, the higher the available pressure and flowrate the better the system performance will be.

The Electromax unvented cylinder has an operating pressure of 3.5 bar which is controlled by the cold water combination valve. The cold water combination valve can be connected to a maximum mains supply pressure of 16 bar. The water supply must be of wholesome water quality (Fluid Category 1 as defined by the Water Supply Regulations 1999).

In some areas of the UK the water supply may have a high level of natural hardness. Whilst this is not detrimental to the quality of the water, in water heating systems the calcium carbonate which causes the water's "hardness" can precipitate onto hot surfaces and in time adversely affect hot water performance. If the temporary hardness of the cold water mains supply exceeds 200mg/l (check with your water supply company) it is recommended that some form of water treatment is considered. Any device selected must be suitable for use in unvented water heating systems and not unduly affect the flow rate capacity to the Electromax cylinder, consult the manufacturer of the device for details.

For optimum performance after installation the Electromax boiler and its associated central heating system must be flushed in accordance with the guidelines given in BS 7593:1992 "Treatment of water in domestic hot water central heating systems". This must involve the use of a proprietary cleanser, such as GE Betz Sentinel X300 or X400, Fernox "Superfloc" or Salamander system cleanser. Follow the manufacturer's instructions to ensure correct cleansing of the system.

For long term protection against corrosion and scale, after flushing, the system should be dosed with an inhibitor such as GE Betz Sentinel X100, Fernox MB-1 or Copal or Salamander System Inhibitor in accordance with the guidelines given in BS 7593.

Failure to flush and add inhibitor to the system will invalidate the appliance warranty.

3.3 Pipework, Fittings and Outlet / Terminal Fittings

NOTE: All pipework, fittings and terminal fittings must be compatible with unvented systems and have a rated operating pressure of at least 6 bar. Where plastic pipe / fittings are being used the rated pressure must be achievable at outlet temperatures that can be expected within the hot water distribution pipework. If in doubt, consult the manufacturer of the fittings selected.

The Electromax unvented cylinder can be used in conjunction with most types of terminal fittings. It is advantageous in many mixer showers or taps to have balanced pressure hot and cold water supplies, in these instances the balanced cold water supply should be taken off the cold Water combination valve (see diagram 5, page 12 and diagram 10, page 16). Branches to cold outlets where drinking water may be drawn should be taken directly from the main supply before the cold water combination valve to avoid the possibility of warm expanded water being drawn from cold taps.

3.4 Treatment of the Primary (Central Heating) Circulating System.

Primary water circulating systems will be subject to corrosion unless an appropriate water treatment is applied. Without treatment the efficiency of the system will be reduced over time as corrosion sludge accumulates within the system, risking damage to the pump and valves, system noise and circulation problems.

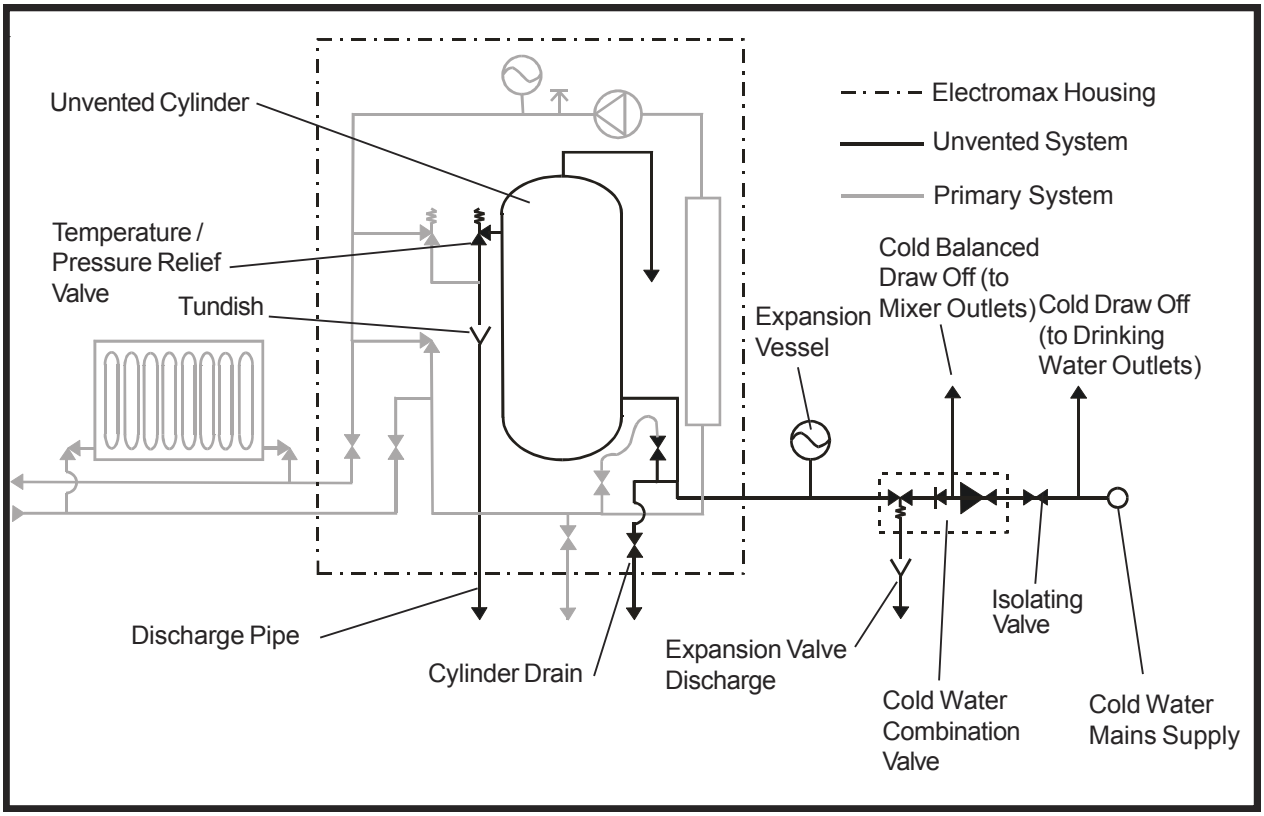

Diagram 5 System Schematic - DHW Cylinder

3.5 Sealed Primary Systems

The Electromax boiler must be installed in a sealed primary system. All necessary primary system controls are supplied fitted to the Electromax. The sealed system expansion vessel fitted has a capacity of 12 litres which, as a general guide, will be suitable for a heating system of up to 107 litres. If in doubt the total primary system volume must be calculated to determine if additional expansion volume is required.

The Electromax initial primary system cold fill pressure is 1.0 bar. The expansion vessel size = 0.11 x the total system volume. The boiler and pipework within the Electromax hold approx. 2 litres of water, therefore additional system expansion volume will only be necessary for systems that exceed 107 litres.

The Electromax boiler incorporates an automatic air vent at its highest point (fitted to the pump housing, see diagram 6, page 13). If any primary pipework is routed above the level of the Electromax additional air vents must be fitted to the highest points of the flow and return pipes and at any point where air is likely to collect.

An automatic bypass valve is fitted to the Electromax to allow thermostatic radiator valves to be fitted to the system.

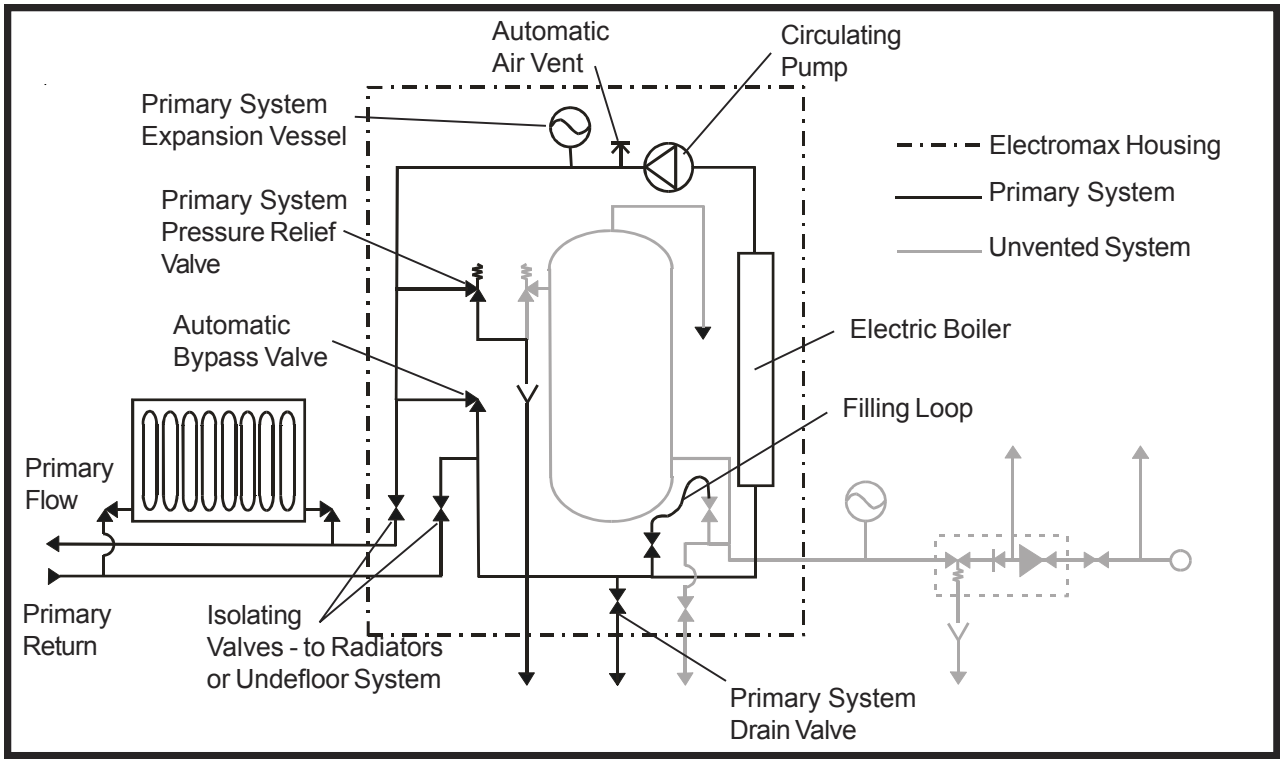

Diagram 6 System Schematic - Primary Circuit

4.0 Installation - General

4.1 Positioning the Electromax

Decide where the Electromax is to be installed. Reference must be made to the dimensions of the unit and the minimum access space requirements (see diagram 1, page 6). Consideration must also be taken of the routing of the pipework to the unit, provision of the discharge pipe and siting of any external controls such as the cold water combination valve and secondary system expansion vessel. Pipework can be connected from below the unit or from the left and right hand sides. Knock-outs are provided in the side panels for side connections. A template is provided to aid in positioning the unit and determining the pipework entry locations.

If using side entry pipework the following connections are made to the Electromax (when viewed from front of unit see diagram 2, page 7):

Left hand side
Primary flow, primary return, discharge pipe

Right hand side
Cold water inlet supply, hot outlet supply.
Note the weight of the product (see Technical data, page 5) and adopt safe lifting techniques. A two man lift is recommended. Hand holds are provided in the left and right hand side panels, the rear and underside. If the front panels are removed prior to positioning in its final installation position DO NOT lift using the exposed pipework assembly.

4.2 Removal of Panels

Refer to diagram 7, page 14. For installation and commissioning the front and top panels must be removed. The lower front panel must be removed before the upper front panel.

The lower front panel (Panel A on diagram 7, page 14) is secured by spring clips and is removed by pulling forward using the finger recesses either side of the panel. Once removed, the two M5 screws securing the lower edge of the upper front panel must be removed. The upper front panel (Panel B on diagram 7) must then be removed by pulling forward to disengage it from the remaining spring clips.

The top panel (Panel C on diagram 7, page 14) is secured by two screws and spring clips. To remove, unscrew the two securing screws on the top panel and then pull upwards from the front edge.

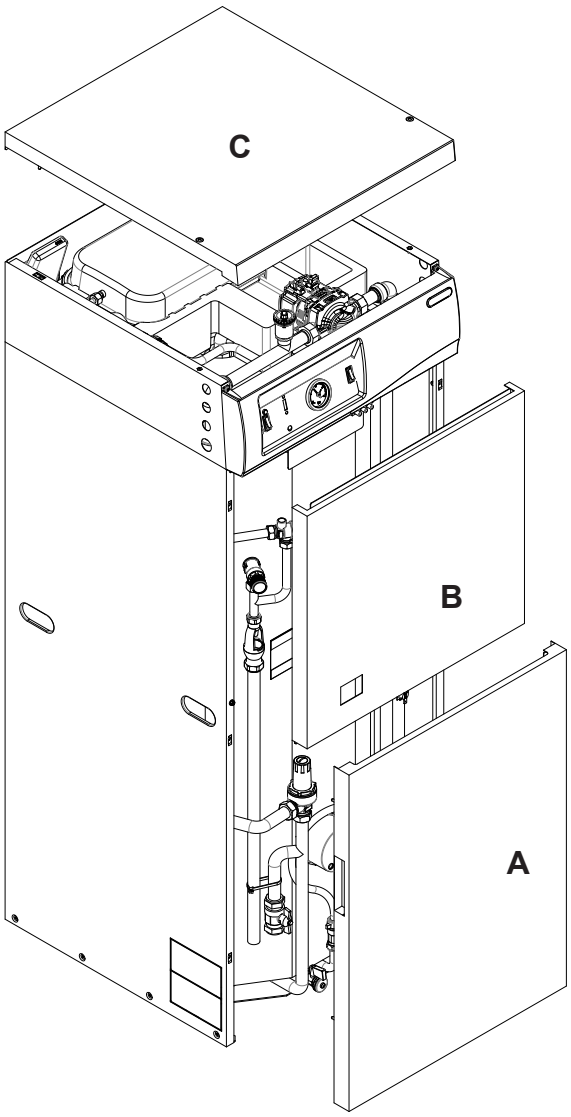

Diagram 7 Removal of Panels

4.3 Cable Entry Positions

The electrical supply cables can be routed to enter the unit from the left or right hand side (see diagram 8, page 15). There are four cable entry holes in each upper side panel; one 25mm diameter and three 20mm diameter. The accessory kit contains a set of cable glands and snap fit blanking plugs. The cable glands should be fitted into the cable entry holes on the side selected for cable entry and secured in place using the lock nuts supplied. The remaining four cable entry holes not used should be blanked off using the appropriate blanking plugs supplied.

The cable glands must be used to secure the electrical supply cables when fitted. Failure to do so can result in the cables straining internal electrical connections and possible electrical failure as a result. Failure due to inadequate cable securing will not be covered by the warranty.

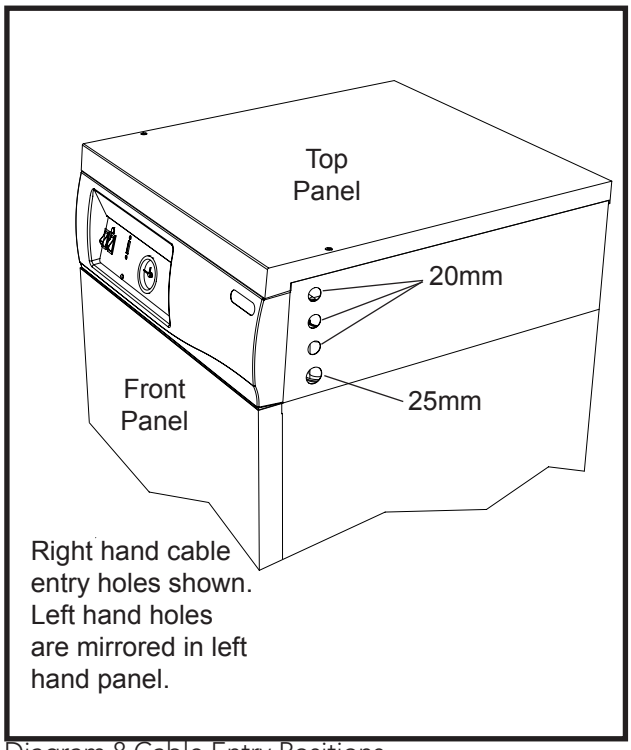

Diagram 8 Cable Entry Positions

4.4 Programmable Room Thermostat

The Electromax is supplied with a Danfoss TP5000 Programmable Room Thermostat. This is in the accessory kit supplied with your unit. Follow the installation instructions provided with the programmable room thermostat for correct siting and mounting of the unit. If the radiators are to be fitted with thermostatic radiator valves (TRV's) the room where the programmable room thermostat is located must not have a TRV fitted in compliance with Building Regulation Part L.

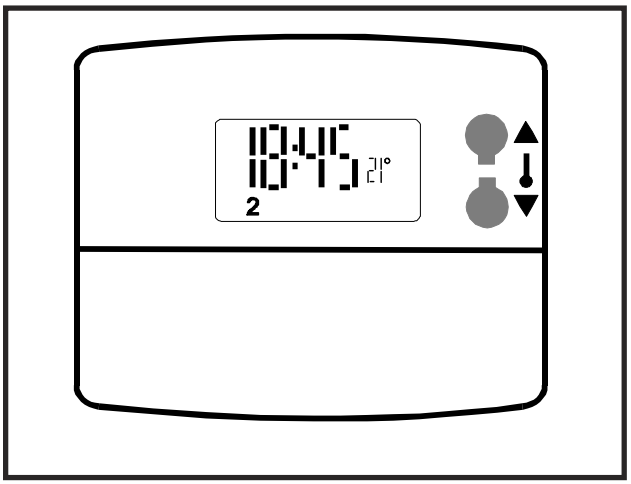

Diagram 9 Programmable Room Thermostat

5.0 Installation - Plumbing

5.1 Pipe fittings

Pipe connections to the Electromax must be made using 22mm compression type fittings. Solder connections directly to the unit must not be made as the heat may damage the insulation materials used. Damage caused by heat applied to solder fittings in close proximity to the unit will not be covered by the warranty. Solder connections may be used elsewhere in the system away from the Electromax unit. Use water soluble flux for making soldered joints and ensure any flux residue is removed following installation.

5.2 Cold Water Combination Valve

The cold water combination valve can be connected anywhere on the cold water mains supply prior to the Electromax unit, however it must be possible to connect the secondary system expansion vessel between this valve and the cold inlet connection of the unit. Whilst it is often more convenient to do so, there is no requirement to site the valve close to the unit, it can be located at a point remote from the unit if this is more convenient. However, ensure the discharge from the expansion valve (see diagram 10, page 16) can be correctly installed. The expansion valve connection must not be used for any other purpose.

The cold water combination valve is installed as a complete one-piece unit. The valve incorporates a pressure reducer, a strainer, an expansion valve and a single check valve. The valve can be fitted in any orientation to suit the installation, however, ensure the valve is installed with the direction of flow arrows (stamped on the side of the brass body) pointing towards the Electromax unit. The expansion relief valve should be installed with the discharge pipework in either the horizontal position or facing downwards, if fitted inverted, debris may be deposited on the seat and cause fouling of the seat.

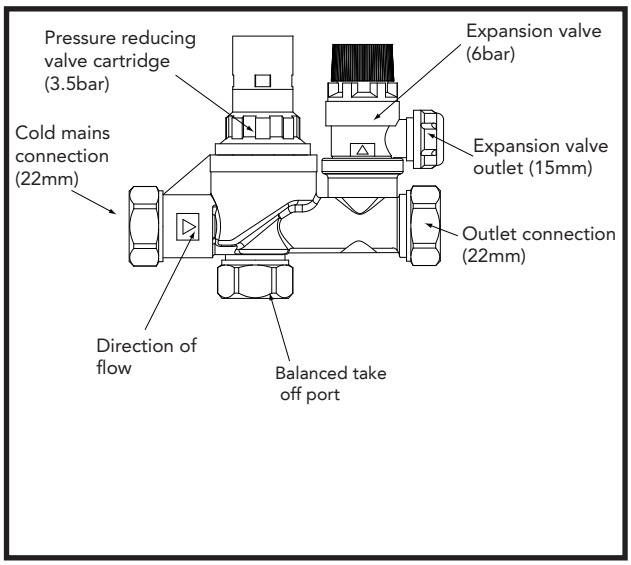

Diagram 10 Cold Water Combination Valve

5.3 Secondary Expansion Vessel

The Secondary (DHW) expansion vessel is supplied in the accessory kit and must be fitted to the cold water supply to the Electromax to accommodate any water expansion that results from heating the water inside the cylinder. The expansion vessel must be fitted between the cold water combination valve and the cold inlet of the Electromax cylinder (see diagram 5, page 12).

The expansion vessel must be adequately supported, a wall mounting bracket is supplied for this purpose. The location of the expansion vessel should allow access for maintenance. This will entail access to the air valve on top of the unit to check and, if necessary, re-charge the vessel pre-charge pressure. The vessel pre-charge pressure is 3.5 bar.

5.4 Balanced Cold Water Supplies

It is advantageous in many mixer showers or taps to have balanced pressure hot and cold water supplies, in these instances the balanced cold water supply is available on the cold water combination valve (see diagram 10, page 16).

Branches to cold outlets where drinking water may be drawn should be taken directly from the main supply before the cold water combination valve to avoid the possibility of warm expanded water being drawn from cold taps.

5.5 Outlet Pipework

The pipework from the Electromax to the hot outlet fittings should be in 22mm pipe with short runs of 15mm pipe to showers and basins. Small bore pipe can be used to suit some taps, but runs should be kept as short as possible. Pipe sizes may vary due to system design.

5.6 Secondary Circulation

Secondary circulation is not recommended for the Electromax as it is intended for Off-Peak electrical operation. During other periods the electricity supply is interrupted to the immersion heaters so no reheating will take place. Circulating the stored water would gradually cool it to an unacceptable temperature.

5.7 Discharge Pipework

It is a requirement of Building Regulation G3 that any discharge from an unvented system is conveyed to where it is visible, but will not cause danger to persons in or about the building. The tundish and discharge pipes should be fitted in accordance with the requirements and guidance notes of Building Regulation G3. The G3 Requirements and Guidance section 3.50 - 3.63 are reproduced in the following sections of this manual. For discharge pipe arrangements not covered by G3 Guidance advice should be sought from your local Building Control Officer. Any discharge pipe connected to the pressure relief devices (expansion valve and temperature/pressure relief valve) must be installed in a continuously downward direction and in a frost free environment.

Water may drip from the discharge pipe of the pressure relief device. This pipe must be left open to the atmosphere. The pressure relief device is to be operated regularly to remove lime deposits and to verify that it is not blocked.

G3 REQUIREMENT

"...there shall be precautions...to ensure that the hot water discharged from safety devices is safely conveyed to where it is visible but will not cause danger to persons in or about the building."
Notes:
Discharge pipe-work D2 can now be a plastic pipe but only pipes that have been tested to a minimum 110°C must be used.
Discharge pipe D2 can now be plumbed into the soil stack but only soil stacks that can handle temperatures of 99°C or greater should be used.

The following extract is taken from the latest G3 Regulations

Discharge pipe D1

3.50 Safety devices such as temperature relief valves or combined temperature and pressure and pressure relief valves (see paragraphs 3.13 or 3.18) should discharge either directly or by way of a manifold via a short length of metal pipe (D1) to a tundish.

3.51 The diameter of discharge pipe (D1) should be not less than the nominal outlet size of the temperature relief valve.

3.52 Where a manifold is used it should be sized to accept and discharge the total discharge form the discharge pipes connected to it.

3.53 Where valves other than the temperature and pressure relief valve from a

single unvented hot water system discharge by way of the same manifold that is used by the safety devices, the manifold should be factory fitted as part of the hot water storage system unit or package.

Tundish - Fitted to Electromax

3.54 The tundish should be vertical, located in the same space as the unvented hot water storage system and be fitted as close as possible to, and lower than, the valve, with no more than 600mm of pipe between the valve outlet and the tundish (diagram 11 & Table 1, page 20).

Note: To comply with the Water Supply (Water Fittings) Regulations, the tundish should incorporate a suitable air gap.
The tundish must be installed away from electrical devices

3.55 Any discharge should be visible at the tundish. In addition, where discharges from safety devices may not be apparent, e.g. in dwellings occupied by people with impaired vision or mobility, consideration should be given to the installation of a suitable safety device to warn when discharge takes place, e.g. electronically operated.

Discharge pipe D2 (not supplied)

3.56 The discharge pipe (D2) from the tundish should:
(a) have a vertical section of pipe at least 300mm long below the tundish before any elbows or bends in the pipework (see diagram 11, page 20); and
(b) be installed with a continuous fall thereafter of at least 1 in 200.

3.57 The discharge pipe (D2) should be made of:
(a) metal; or
(b) other material that has been demonstrated to be capable of safely withstanding temperatures of the water discharged and is clearly and permanently marked to identify the product and performance standard (e.g. as specified in the relevant part of BS 7291).

3.58 The discharge pipe (D2) should be at least one pipe size larger than the nominal outlet size of the safety device unless its total equivalent hydraulic resistance exceeds that of a straight pipe 9m long, i.e. for discharge pipes between 9m and 18m the equivalent resistance length should be at least two sizes larger than the nominal outlet size of the safety device; between 18 and 27m at least 3 sizes larger, and so on; bends must be taken into account in calculating the flow resistance. (See diagram 11, Table 1, G3), (diagram 11 & Table 1, page 20 in these instructions) and the worked example.

Note: An alternative approach for sizing discharge pipes would be to follow Annex D, section D.2 of BS 6700 Specification for design, installation, testing and maintenance of services supplying water for domestic use within buildings and their curtilages.

3.59 Where a single common discharge pipe serves more than one system, it should be at least one pipe size larger than the largest individual discharge pipe (D2) to be connected.

3.60 The discharge pipe should not be connected to a soil discharge stack unless it can be demonstrated that that the soil discharge stack is capable of safely withstanding temperatures of the water discharged, in which case, it should:
(a) contain a mechanical seal, not incorporating a water trap, which allows water into the branch pipe without allowing foul air from the drain to be ventilated through the tundish;
(b) be a separate branch pipe with no sanitary appliances connected to it;
(c) if plastic pipes are used as branch pipes carrying discharge from a safety device they should be either polybutalene (PB) to Class S of BS 7291-2 or cross linked

polyethylene (PE-X) to Class S of BS 7291-3:2006; and

(d) be continuously marked with a warning that no sanitary appliances should be connected to the pipe.

Note:

1. Plastic pipes should be joined and assembled with fittings appropriate to the circumstances in which they are used as set out in BS EN ISO 1043-1.
2. Where pipes cannot be connected to the stack it may be possible to route a dedicated pipe alongside or in close proximity to the discharge stack.

Termination of discharge pipe

3.61 The discharge pipe (D2) from the tundish should terminate in a safe place where there is no risk to persons in the vicinity of the discharge.

3.62 Examples of acceptable discharge arrangements are:

(a) to a trapped gully with the end of the pipe below a fixed grating and above the water seal;

(b) downward discharges at low level; i.e. up to 100mm above external surfaces such as car parks, hard standings, grassed areas etc. are acceptable providing that a wire cage or similar guard is positioned to prevent contact, whilst maintaining visibility; and

(c) discharges at high level: e.g. into a metal hopper and metal downpipe with the end of the discharge pipe clearly visible or onto a roof capable of withstanding high temperature discharges of water and 3m from any plastic guttering system that would collect such discharges.

3.63 The discharge would consist of high temperature water and steam. Asphalt, roofing felt and non-metallic rainwater goods may be damaged by such discharges.

Worked example of discharge pipe sizing

Diagram 11, page 20: shows a G1/2 temperature relief valve with a discharge pipe (D2) having 4 No. elbows and length of 7m from the tundish to the point of discharge.

From Table 1, page 20:
Maximum resistance allowed for a straight length of 22mm copper discharge pipe (D2) from a G1/2 temperature relief valve is 9.0m.
Subtract the resistance for 4 No. 22mm elbows at 0.8m each = 3.2m

Therefore the permitted length equates to: 5.8m

5.8m is less than the actual length of 7m therefore calculate the next largest size.

Maximum resistance allowed for a straight length of 28mm pipe (D2) from a G1/2 temperature relief valves equates to 18m.
Subtract the resistance of 4 No. 28mm elbows at 1.0m each = 4.0m

Therefore the maximum permitted length equates to: 14m

As the actual length is 7m, a 28mm (D2) copper pipe will be satisfactory.

WARNINGS:

- Under no circumstances should the factory fitted temperature/pressure relief valve be removed other than by a competent person. To do so will invalidate any guarantee or claim.
- The cold water combination valve assembly must be fitted on the Electromax water supply to the Electromax cylinder.
- No control or safety valves should be tampered with or used for any other purpose.
- The discharge pipe should not be blocked or used for any other purpose.

VALVE OUTLET SIZE	MINIMUM SIZE OF DISCHARGE PIPE D1	MINIMUM SIZE OF DISCHARGE PIPR D2 FROM TUNDISH	MAXIMUM RESISTANCE ALLOWED, EXPRESSED AS A LENGTH OF STRAIGHT PIPE	RESISTANCE CREATED BY EACH ELBOW OR BEND
G 1/2	15mm	22mm 28mm 35mm	UP TO 9M UP TO 18M UP TO 27M	0.8M 1.0M 1.4M
G 3/4	22mm	28mm 35mm 42mm	UP TO 9M UP TO 18M UP TO 27M	1.0M 1.4M 1.7M
G1	28mm	35mm 42mm 54mm	UP TO 9M UP TO 18M UP TO 27M	1.4M 1.7M 2.3M

Table 1 Sizing of Copper Discharge Pipes (D2) for Common T&P Relief Valve Sizes

NOTE: The above table is based on copper tube. Plastic pipes may be of different bore and resistance. Sizes and maximum lengths of plastic should be calculated using data prepared for the type of pipe being used.

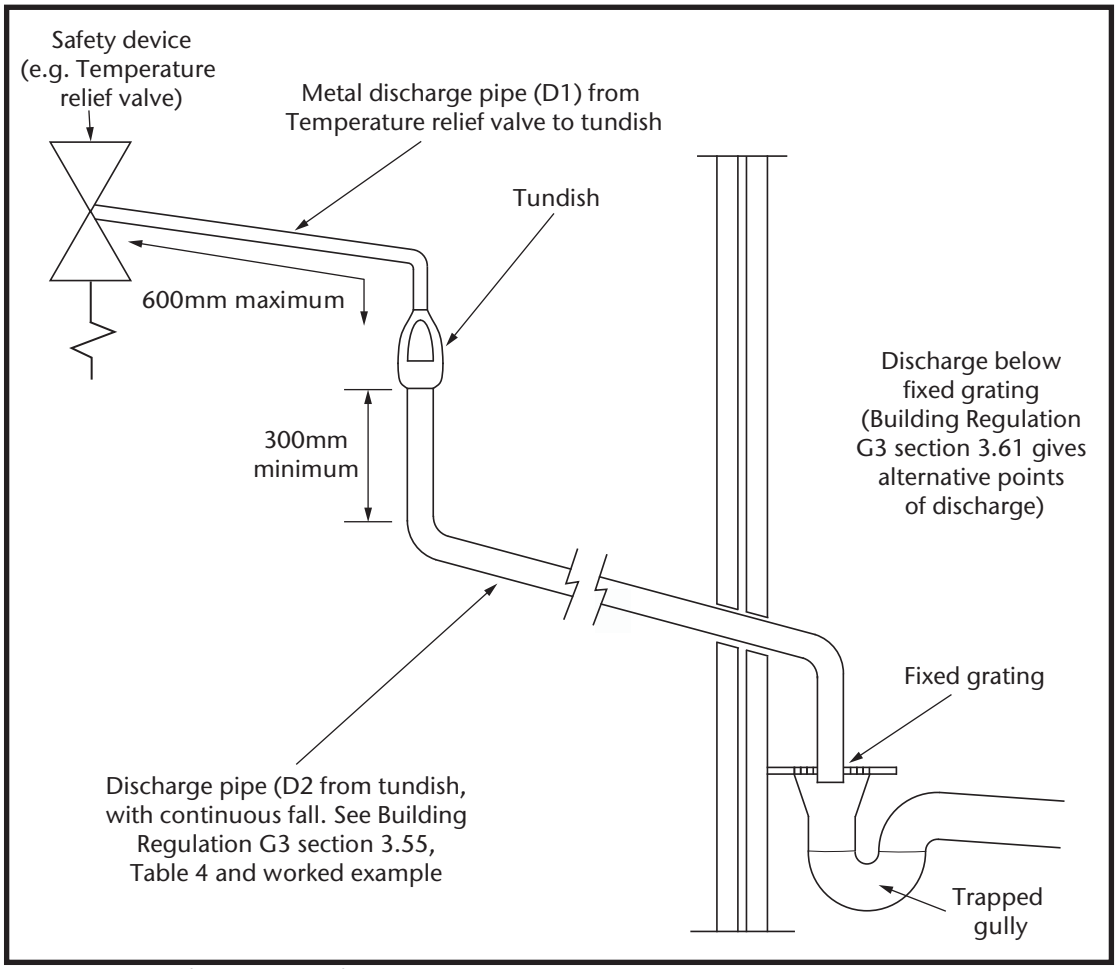

Diagram 11 - Schematic Discharge Pipe Arrangement

5.8 Primary (Central Heating) Pipework

Connections to the Electromax primary flow and return must be in 22mm o/dia. pipe. Isolating valves are fitted to the Electromax unit on the primary flow and return connections to enable the Electromax boiler to be isolated from the primary circuit for maintenance and servicing. Connections to the isolating valves are 22mm compression.

Conventional radiator based central heating design considerations should be made in selecting the radiators and circulating pipework sizes. The maximum output from the Electromax boiler is either 9kW or 6kW, ensure the radiator load does not exceed this. NOTE: The Electromax boiler is dedicated to the space heating only, the domestic hot water is heated by separate immersion heaters, so there is no requirement to allow a hot water loading factor in designing the primary system.

Use water soluble flux for making soldered joints and ensure any flux residue is removed following installation.

A filling loop is provided within the Electromax casing to fill the primary circuit directly from the cold water supply. When the system is full and correctly pressurised the flexible hose of the filling loop should be disconnected from the primary circuit.

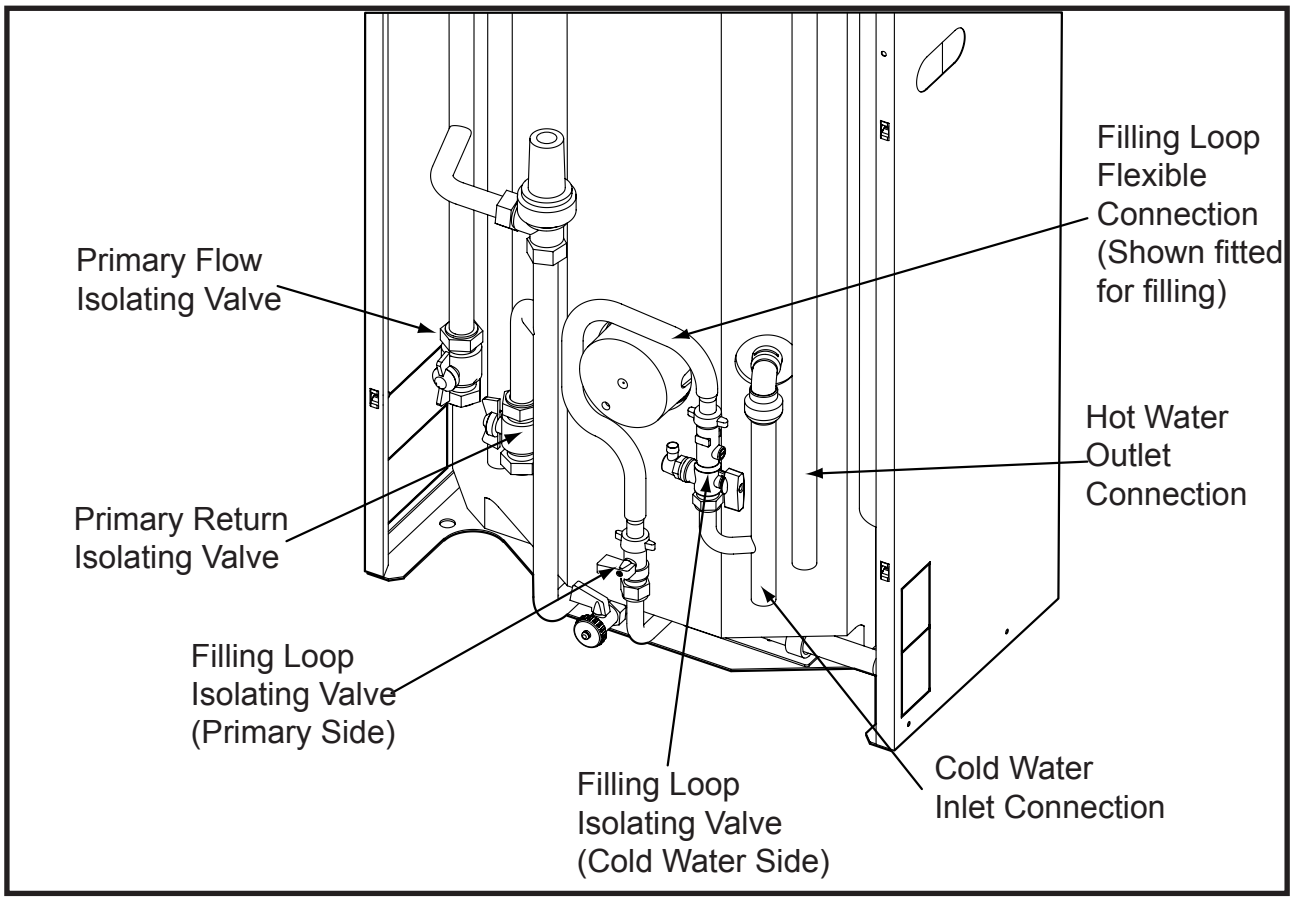

Diagram 12 Primary Connections

6.0 Installation - Electrical

6.1 Important Notes

All wiring must be carried out in accordance with the current IEE Wiring Regulations.

The Electromax electrical installation must be carried out by a competent person in accordance with any relevant regulations in force at the time of installation and the requirements of these instructions to ensure correct operation.

The main incoming electrical supply to the property must be of sufficient current rating and voltage for the Electromax and any other electrical requirements for the property.

The consumer unit must be fitted with a double pole RCD with a trip sensitivity of 30mA capable of breaking the full load current to BS EN 61008.

A correctly rated MCB must be used in the supply to the Electromax boiler and immersion heaters. The MCB to the boiler must be rated at 45A. The MCB to each immersion heater must be rated at 16A. It may be necessary to fit a blanking plate between the 45A MCB and other MCB's in the consumer unit to provide ventilation, check with the MCB manufacturer. Each circuit must incorporate an isolating switch which must have a minimum contact separation of at least 3mm in all poles.

3 amp protection has been provided for the thermostat 'L' and the pump 'L'. The fuses are located in the control assembly.

6.2 Off-Peak and 24 hour Electrical Supply

To obtain optimum performance and lowest running costs from your Electromax unit it should be connected to an Off-Peak electrical supply. The "Economy 10" tariff, which is available from most major electricity suppliers, is recommended. Other Off-Peak tariffs may be suitable, consult the Heatrae Sadia Specification Team or your electricity supplier for further advice.

With an Off-Peak electrical supply there will be two sets of electrical outputs from the consumer unit or two separate consumer units. One will supply the circuits that have a dedicated off peak use (such as night storage heaters or off peak water heater), the other will provide a 24 hour supply to circuits in use throughout the day (such as lighting, sockets, etc.).

Off Peak supply connection

A suitable electrical connection must be taken from the Off Peak supply to the Electromax terminal block. The supply cable should be 1.5mm^2 cross sectional area 3 core HOFR sheathed cable and must be routed into the Electromax via one of the 20mm cable glands previously fitted (see section 3.3, page 12). The Live (Brown) conductor should be connected to the termination marked "OFF PEAK SUPPLY L"; the Neutral (Blue) conductor should be connected to the termination marked "OFF PEAK NEUTRAL N"; the Earth (Green/Yellow) conductor should be connected to one of the terminations marked ⏚ "EARTH CONNECTION". See section 6.1, page 22 for MCB and isolation requirements.

24 Hour supply connection (NB NOT Boiler connection)

A suitable electrical connection must be taken from the 24 Hour supply to the Electromax terminal block. The supply cable should be 1.5mm^2 cross sectional area 3 core HOFR sheathed cable and must be routed into the Electromax via one of the 20mm cable glands previously fitted (see section 3.3, page 12). The Live (Brown) conductor should be connected to the termination marked "24 HOUR SUPPLY L"; the Neutral (Blue) conductor should be connected to the termination marked " 24 HOUR NEUTRAL N"; the Earth (Green/ Yellow) conductor should be connected to one of the terminations marked ⏚ "EARTH CONNECTIONS". See section 6.1, page 22 for MCB and isolation requirements.

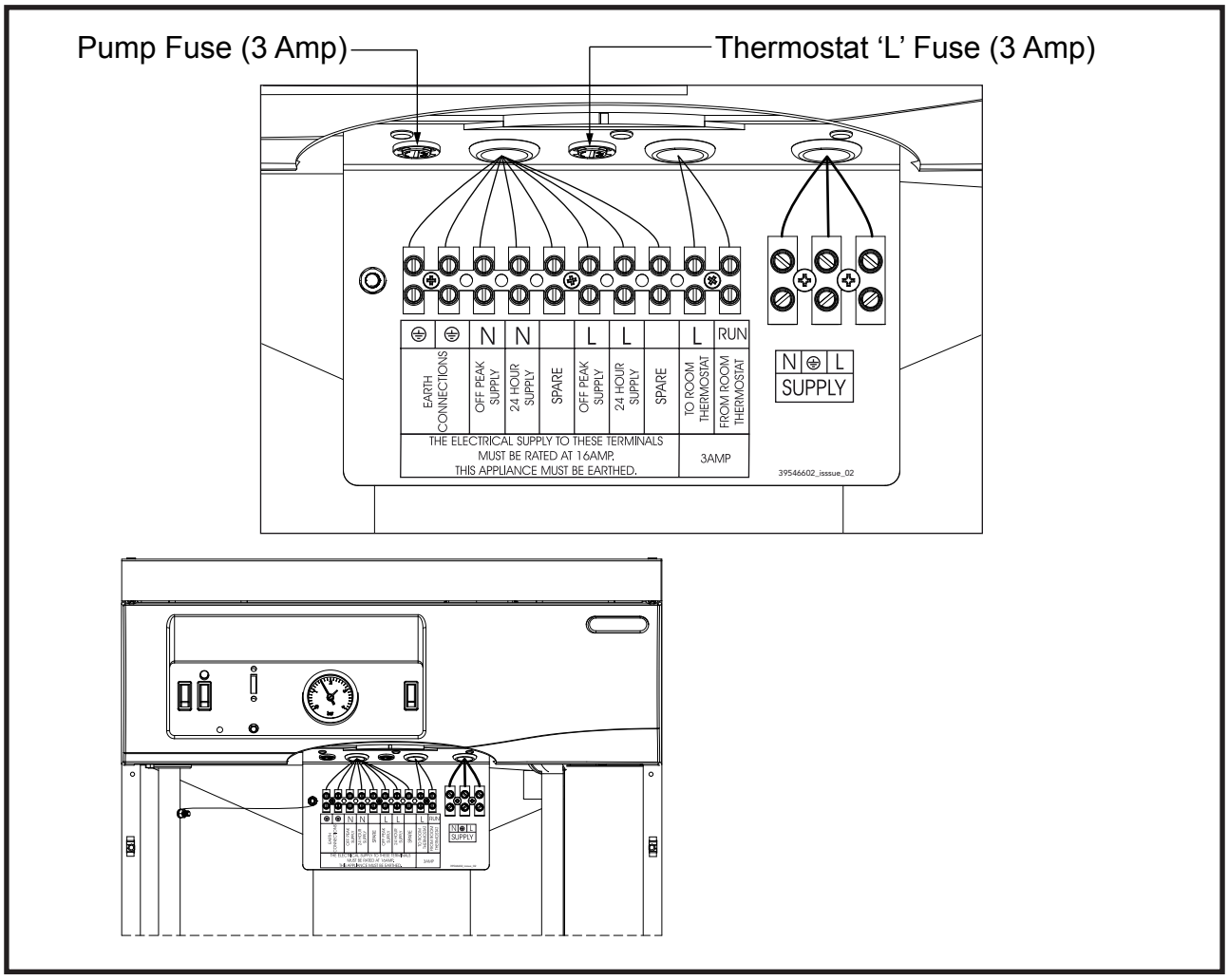

Diagram 13 Electrical Supply Connection Block

6.3 Boiler Connection

The Electromax boiler has a rated maximum output of 9kW or 6kW at 240V ~ . The supply cable must therefore be separate and dedicated to the boiler. The supply cable should be a minimum of 10mm² cross sectional area, (check the IEE Wiring Regulations for correct cable sizing). It must be routed into the Electromax via the 25mm cable gland previously fitted (see section 3.3, page 12). The Live (Brown) conductor should be connected to the termination marked "L SUPPLY"; the Neutral (Blue) conductor should be connected to the termination marked "N SUPPLY"; the Earth (Green/Yellow) conductor should be connected to the termination marked ⏚ "EART CONNECTION". Where "twin and earth" cable is being used the bare earth conductor should be sleeved with suitable Green / Yellow earth cable sleeving. See section 6.1, page 22 for MCB and isolation requirements.

6.4 Programmable Room Thermostat Connection

Refer to the instruction leaflet supplied with the programmable room thermostat and diagram 14 (schematic wiring diagram). Connection to the Electromax should be with 2 core cable of 0.5mm² to 1.0mm² cross sectional area suitable for a 240V supply, bell wire MUST NOT be used. The cable must be routed into the Electromax via one of the 20mm cable glands previously fitted (see section 3.3, page 12). One conductor should be connected to the termination marked "TO ROOM THERMOSTAT L"; the other conductor should be connected to the termination marked "FROM ROOM THERMOSTAT RUN".

Please note that the terminations on the programmable room thermostat marked "B COM" and "C N/O" should be used. Connection to terminal "A N/C" will result in incorrect operation of the Electromax boiler. The clock function of the programmable room thermostat is battery operated (2 x AA/ MN1500/LR alkaline batteries supplied).

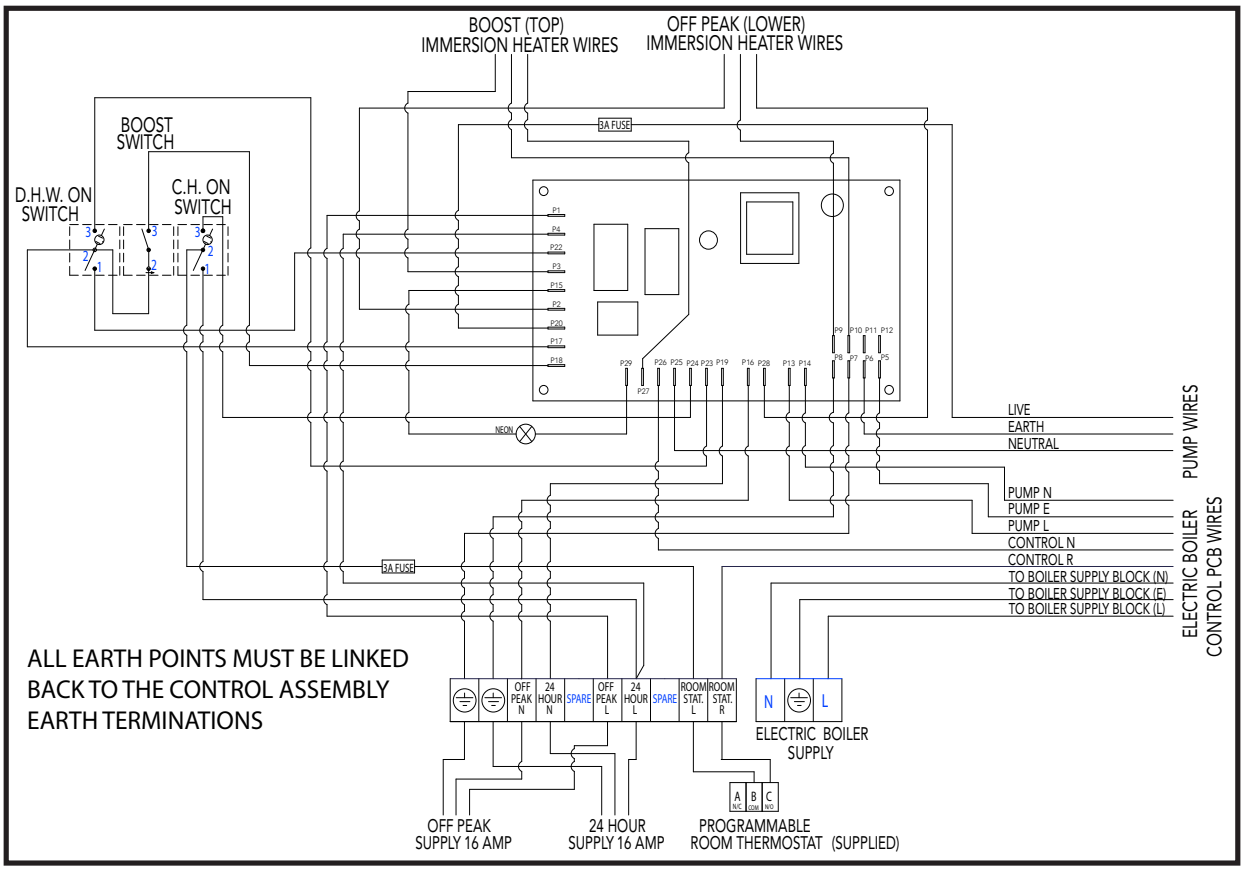

Diagram 14 Schematic Wiring Diagram

7.0 Commissioning

IMPORTANT : DO NOT SWITCH ON THE ELECTRICAL SUPPLIES TO THE ELECTROMAX UNTIL THE CYLINDER AND PRIMARY CIRCUIT HAVE BEEN CORRECTLY FILLED WITH WATER

7.1 Filling The Electromax Cylinder

(a) Check that all connections to the Electromax are tight.
(b) Open a hot tap furthest from the Electromax.
(c) Check the primary system filling loop isolating valves are closed (see diagram 15, page 25).
(d) Open the cold water supply isolating valve and allow the Electromax cylinder to fill. When water issues from the tap, allow to run for a few minutes to thoroughly flush through any residue, dirt or swarf, then close tap.
(e) Open successive hot taps and any cold outlet supplied by a balanced take off to purge any air from the system.
(f) Check all connections (including immersion heater connections) for leaks and rectify as necessary.
(g) The strainer housed within the cold water combination valve should be cleaned to remove any debris that may have been flushed through the main supply pipe. Refer to section 8.2, page 30 for instructions on how to do this.

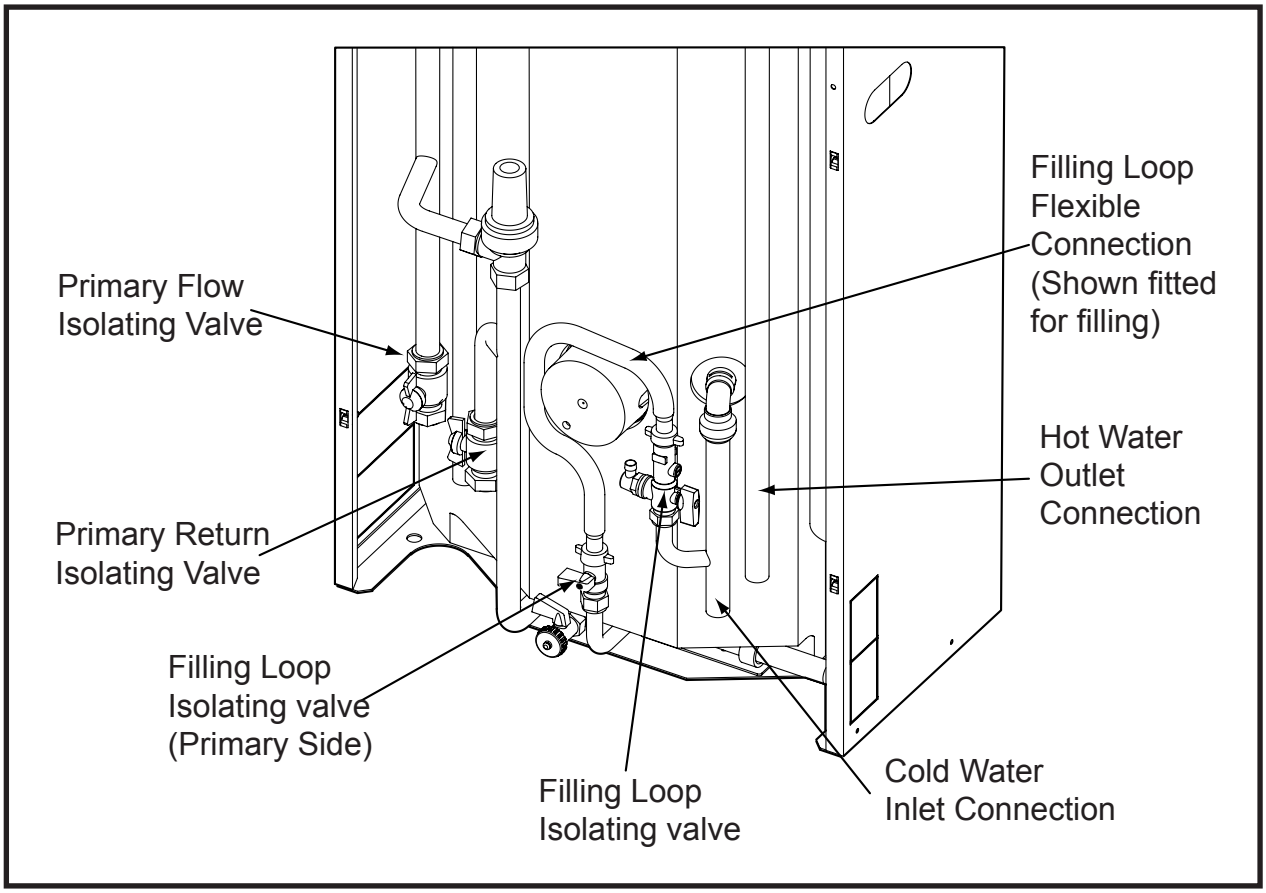

Diagram 15 Connections and Filling Points

7.2 Filling The Sealed System Primary Circuit

(a) The primary system must be flushed in accordance with BS 7593 and the manufacturer's instructions supplied with the flushing agent selected.
(b) Connect the primary filling loop and tighten connections (see diagram 15, page 25).
(c) Check all radiator valves are in the open position.
(d) Open the filling loop isolating valves and allow primary system to fill until the pressure gauge on the fascia of the Electromax reads approx. 2.0 bar.
(e) Purge air from all radiators and air vent points in the primary system.
(f) Check the primary system pressure. This should be between 1.0 and 1.5 bar. If lower, open filling loop isolating valves until gauge reads approx. 2.0 bar. Repeat air purging operation. This sequence may need to be repeated several times to ensure all air is purged from the system.
(g) Check primary system for leaks and rectify as necessary.
(h) When the pressure gauge remains steady at between 1.0 and 1.5 bar ensure both filling loop isolating valves are closed and remove filling loop flexible hose from the primary system connection point.

7.3 Check The Operation of the Safety Valves

(a) Slowly manually open, for a few seconds, the temperature and pressure relief Valve on the Electromax (see diagram 16, page 26). Check water discharged runs freely away through the tundish and discharge pipework. Close valve, ensure water flow stops and valve reseats correctly.
(b) Repeat the above steps for the expansion valve situated on the cold water combination valve (see diagram 17, page 26)
(c) Repeat the above steps for the primary system pressure relief valve on the Electromax (see diagram 16, page 26).

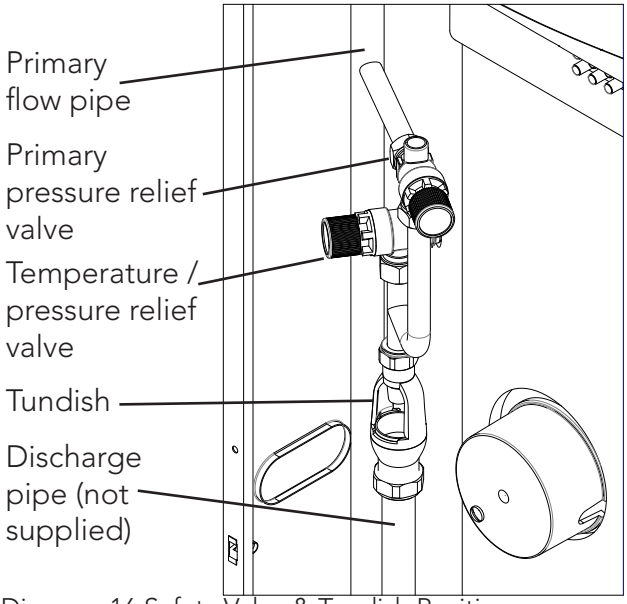

Diagram 16 Safety Valve & Tundish Positions

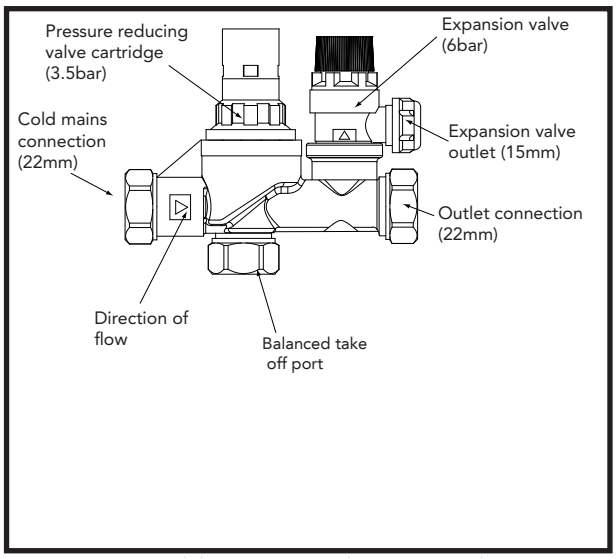

Diagram 17 Cold Water Combination Valve

After this operation check that the primary system pressure has not dropped below 1.0 bar. If it has re-connect the filling loop and refill until the gauge reads between 1.0 and 1.5 bar. Always close filling loop isolating valves and remove hose from the primary system.

7.4 Set The Programmable Room Thermostat

(a) Fit the batteries supplied to the programmable room thermostat. The battery compartment is located behind the hinged cover under a snap fit panel. Ensure the batteries are inserted with the correct polarity (i.e. "+" to "+", "-" to "-".)

(b) Using the instructions supplied with the programmable room thermostat set the time and day on the clock display.

(c) The programmable room thermostat is supplied with a number of factory preset programmes, these are listed in the instruction leaflet. These can be reset to other periods depending on the users requirements.

(d) NOTE: To obtain lower running costs it is recommended that central heating on times be programmed to co-incide (wherever feasible) with any "Off-Peak" tariff periods available during the day. The Economy 10 tariff will provide at least two periods during the day at a lower cost "Off-Peak" rate. Heating times can, of course, be programmed to run outside these times.

(e) NOTE: The programmable room thermostat does not control the domestic hot water (DHW) heating times.

7.5 Preliminary Electrical Checks

(a) Check all electrical connections are tight. Loose connections can cause over-heating of terminals and the possibility of a fire.

(b) Check all earth bonding links are connected, are tight and un-damaged.

(c) The electrical system should be checked for earth continuity, short circuits, polarity and resistance to earth.

(d) The immersion heaters are factory set to give a hot water storage temperature of approx. 60°C (between graduations 4 and 5 on the thermostat). The full temperature adjustment range is from 10° to 70°C (1 to 5 on the thermostat). If required the thermostats should be readjusted by isolating the electrical supply to the immersion heaters and then removing the immersion heater covers and rotating the thermostat adjustment knob (see diagram 18, page 27) using a flat bladed screwdriver. Replace the covers before operating the unit.

7.6 Check Operation of the Electric Boiler

(a) Switch on the 24 Hour electrical supply and Boiler supply MCB's. Switch on the isolation switches.

(b) Switch on the CH "on" switch (see diagram 19, page 28). The switch should be illuminated when on.

(c) Set the "FLOW TEMP" adjustment (see diagram 19, page 28) to minimum position.

(d) Set the programmable room thermostat to be calling for heat (the set programme may need to be over-ridden to do this, refer to the instructions supplied with the programmable room thermostat.

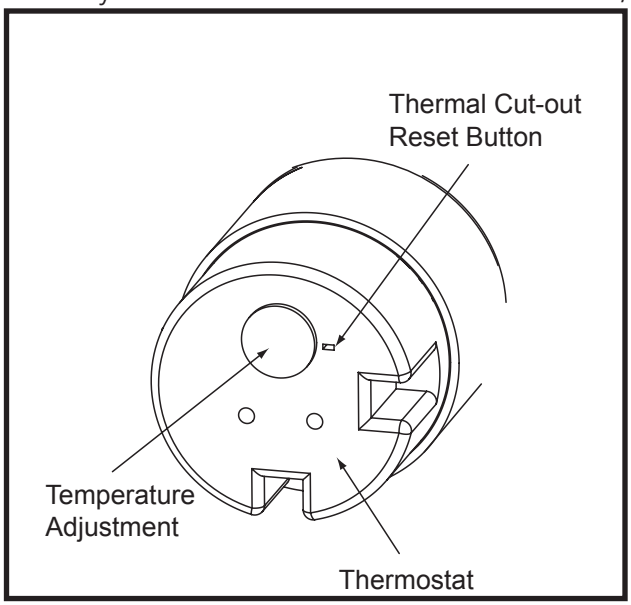

Diagram 18 Immersion Heater Thermostat

(e) The boiler "DEMAND" indicator will flash green and the pump should run.

(f) After approx. 2-3 minutes the "DEMAND" indicator will remain illuminated green (no longer flashing) and the "HEAT" indicator will illuminate. The height of the "HEAT" indicator will vary as the boiler heat input modulates the power.

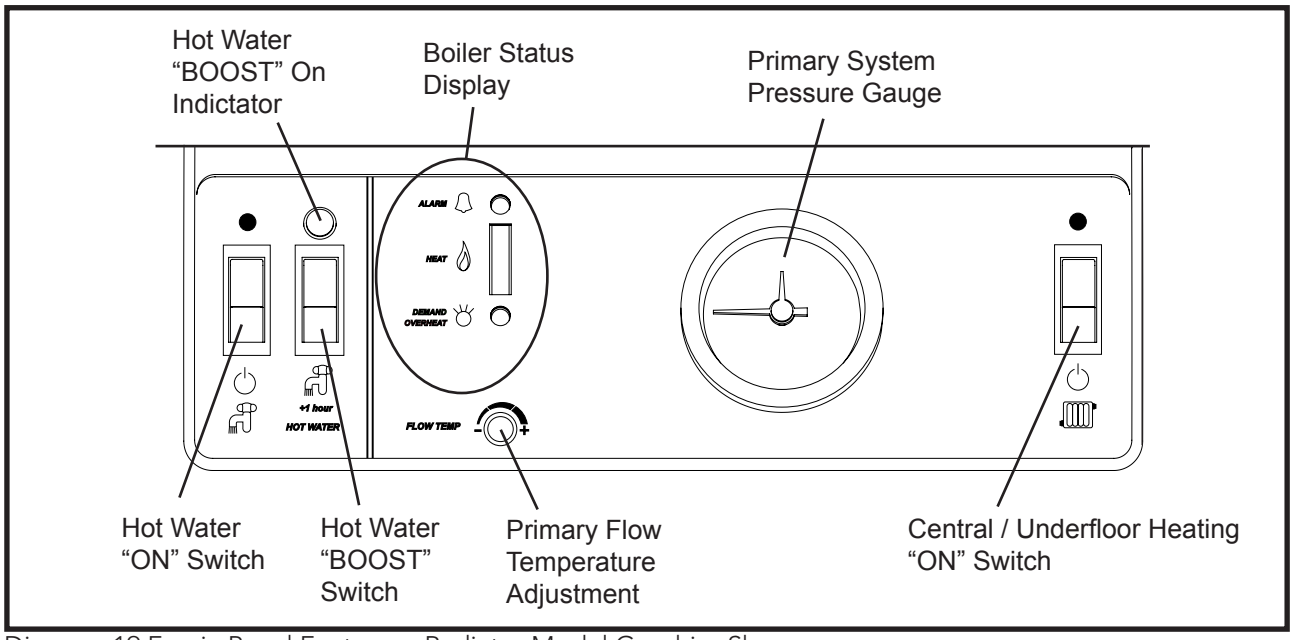

Diagram 19 Fascia Panel Features - Radiator Model Graphics Shown

(g) Check the primary FLOW pipework from the Electromax begins to rise in temperature.

(h) When the boiler is operating at its maximum power output (“HEAT” indicator fully illuminated) set the pump speed to give a 5° to 10° C differential between the primary flow and return connections at the boiler.

(i) Set the programmable room thermostat to be satisfied (not calling for heat). The “HEAT” and “DEMAND” indicators should no longer be illuminated, however the pump may continue to run for a short period (pump over-run facility) to dissipate the heat from the boiler heat exchanger if required.

(j) When the system is hot bleed all radiators and air vents to remove any residual air from the system.

7.7 Setting the Automatic By-pass Valve

(a) Loosen the brass locking screw on top of the adjustment cap of the by-pass valve (see diagram 42, page 43).

(b) Turn the adjustment knob fully clockwise so that the number 5 coincides with the indicator arrow on the body of the valve.

(c) With the boiler on (“DEMAND” and “HEAT” indicators illuminated) and the pump running, slowly turn the adjustment knob anti-clockwise until hot water can be felt on the outlet side of the by-pass valve.

(d) Turn the adjustment knob clockwise by half a turn. Lock in position by tightening the brass locking screw.

7.8 Check Operation of the Immersion Heaters

(a) The Off-Peak immersion heater is controlled by the Off-Peak electrical supply and will only switch on during Off-Peak supply periods as defined by your electricity supplier
(b) Switch on the Off-Peak electrical supply MCB and isolating switch.
(c) Switch on the domestic hot water "on" switch (indicated by a "tap" symbol, see diagram 19, page 28). The switch should be illuminated when on.
(d) Press the DHW Boost switch (indicated by a "tap" symbol followed by "+1 hour", see diagram 19, page 28). The DHW Boost indicator should illuminate.
(e) The DHW boost immersion heater should only operate for a period of one hour or until the set temperature on its control thermostat is reached. After one hour the DHW Boost indicator light will go out.

7.9 Demonstration to User

Following commissioning any panels or covers removed must be replaced and fully secured in place. The system, its function and control should be fully explained to the user. This must include:

(a) DHW supply –
Explain how the complete cylinder is only heated by Off-Peak electricity.
Explain how a one hour DHW boost can be obtained if a day time top up is required.
(b) Central Heating –
Explain how the central heating system works.
Explain the operation of the programmable room thermostat and the settings that have been programmed.
Explain how the programmable room thermostat can be over-ridden if required.
(c) System malfunction –
Explain what to do if the system malfunctions or the "alarm" indicators are illuminated.
(d) System maintenance –
Explain the necessity for the system to receive regular maintenance to ensure its continued safe and efficient operation.
(e) User Instructions –
Hand over the Electromax Installation Instructions, the Danfoss TP 5000 Installation and User Instructions and the Electromax User Instructions.

7.10 Benchmark

The appliance is covered by the Benchmark Scheme which aims to improve the standards of installation and commissioning of domestic heating and hot water systems in the UK and to encourage regular servicing to optimise safety, efficiency and performance.

Benchmark is managed and promoted by the Heating and Hotwater Industry Council. For more information visit www.centralheating.co.uk.

Please ensure that the installer has fully completed the Benchmark Checklist (see page 46) of this manual and that you have signed it to say that you have received a full and clear explanation of its operation. The installer is legally required to complete a commissioning checklist as a means of complying with the appropriate Building Regulations (England & Wales).

All installations must be notified to Local Area Building Control either directly or through a Competent Persons Scheme. A Building Regulations Compliance Certificate will then be issued to the customer who should, on receipt, write the Notification Number on the Benchmark Checklist.

This product should be serviced regularly to optimise its safety, efficiency and performance. The service engineer should complete the relevant Service Record on the Benchmark Checklist after each service. The Benchmark Checklist may be required in the event of any warranty work.

8.0 Maintenance

8.1 Maintenance requirements

To ensure the continued optimum performance of the Electromax it should be regularly maintained. Maintenance should be carried out by a competent person and any replacement parts used should be authorized Heatrae Sadia Electromax spare parts. It is recommended that maintenance is carried out annually and should include the checks detailed in the sections below. The primary system inhibitor concentration should also be checked and topped up if necessary.

IMPORTANT: Disconnect ALL electrical supplies before removing the covers or panels to the appliance.

8.2 Check cylinder water supply

(a) Turn off the mains water supply to the Electromax and release the system pressure by opening a hot tap. Some hot water will flow for a short while, this is normal.
(b) Unscrew the larger plastic 'nut' on the reducing valve cartridge (see diagram 17, page 26). Remove the moulded housing.
(c) Remove the strainer mesh housed inside the moulding. Wash any particulate matter from the strainer mesh under clean running water.
(d) Replace the pressure reducing valve cartridge in the housing and re-fit to the brass body of the cold water combination valve.
(e) Remove the dust cap from the top of the secondary expansion vessel. Check the charge pressure of the vessel using a tyre pressure gauge. The pressure (with system de-pressurised) should be 3.5 bar. If lower than the required setting it should be re-charged using a tyre pump (Schrader valve type). DO NOT over charge. Re-check the charge pressure and when correct replace the dust cap.

8.3 Descaling immersion heaters

In hard water areas where no water treatment measures have been taken the immersion heaters may require descaling. The Electromax cylinder must be drained before the immersion heaters can be removed.

(a) Disconnect the electrical supplies to the Electromax.
(b) Remove the front panels (refer to section 4.2, page 14).
(c) Connect a hose to the DHW drain point (see diagram 20, page 30) & open hot taps to releive pressure from system. Unscrew square headed stop plug to allow water to drain from the cylinder. If water fails to drain from the cylinder vent the unit by manually opening the temperature/ pressure relief valve.
(d) Remove the immersion heater covers by unscrewing the securing screws.
(e) Disconnect the wiring from the immersion heater thermostats. Remove the thermostats by carefully pulling outwards from the immersion heaters.
(f) Unscrew immersion heater backnuts using the key spanner supplied with the unit. Remove the immersion heaters. Over time the immersion heater gaskets may become stuck to the mating surface, to break the seal insert a round bladed screwdriver into one of the pockets on the immersion

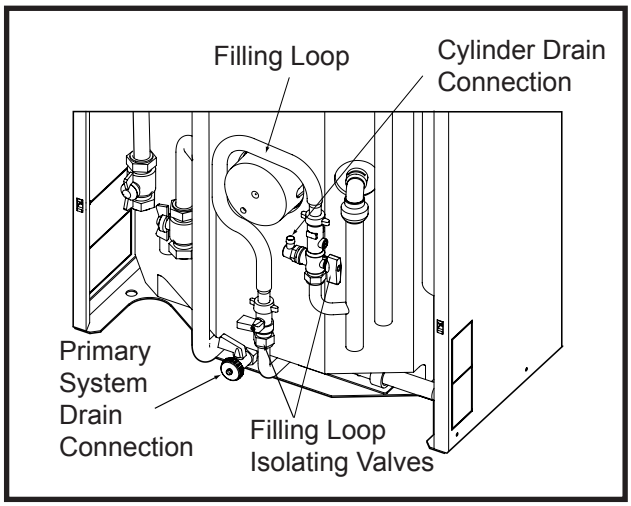

Diagram 20 Drain Points

heater and gently lever up and down.

(g) Carefully remove any scale from the surface of the immersion heater elements. DO NOT use a sharp implement as damage to the element surface could be caused. Ensure sealing surfaces are clean and seals are undamaged. If in doubt fit new sealing gaskets.

(h) Whilst the immersion has been removed, the immersion boss can be used to as an access to view the internal of the cylinder if required.

(i) Replace the immersion heaters ensuring the right angled element is inserted into the lower immersion heater boss and hangs vertically downwards towards the base of the unit.

(j) Secure the immersion heaters in place using the backnuts previously removed. It may be helpful to support the immersion heater using a round bladed screwdriver inserted into one of the thermostat pockets whilst the backnut is tightened.

(k) Replace the thermostats by carefully plugging the two male spade terminations on the underside of the thermostat head into the corresponding terminations on the element.

(l) Rewire the immersion heaters in accordance with diagram 14, page 24. Refit and secure the immersion heater covers.

(m) Close the drain tap and turn on mains water supply.

(n) When water flows from the hot taps allow to flow for a short while to purge air and flush through any disturbed particles.

(o) Close hot taps and then open successive hot taps to purge any air.

8.4 Operation of cylinder safety valves

(a) Slowly open the temperature and pressure relief valve by twisting its cap for a few seconds.

(b) Check water is discharged and that it flows freely through the tundish and discharge pipework.

(c) Release valve cap and check water flow stops and valve re-seats correctly.

(d) Repeat the procedure above for the expansion valve located on the cold water combination valve.

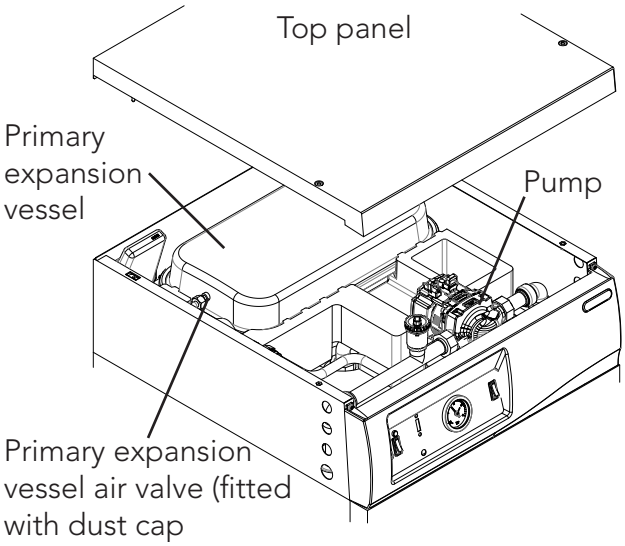

Diagram 21 Primary expansion vessel position

8.5 Operation of Primary System Safety Valve

(a) Close the primary flow and return isolating valves (see diagram 15, page 25).
(b) Slowly open the primary system pressure relief valve (see diagram 16, page 26) by twisting its cap for a few seconds.
(c) Check water is discharged and that it flows freely through the tundish and discharge pipework.
(d) Release valve cap and check water flow stops and valve re-seats correctly.
(e) Check pressure in system & repressurise if required.

8.6 Primary System Expansion Vessel Charge Pressure

(a) Open the primary system pressure relief valve and allow water to flow until the system pressure gauge drops to zero.
(b) Remove the top panel (refer to section 4.2, page 14).
(c) Remove the dust cap from the primary system expansion vessel (see diagram 21, page 31).
(d) Check the charge pressure of the vessel using a tyre pressure gauge. The pressure (with system de-pressurised) should be 1.0 to 1.2 bar. If lower than the required setting it should be re-charged using a tyre pump (Schrader valve type). DO NOT over charge. Re-check the charge pressure and when correct replace the dust cap.
(e) Connect the filling loop. Open the filling loop isolating valves and allow system to re-pressurise to approx. 1.5 bar.
(f) Close the filling loop isolating valves and remove the flexible hose.
(g) Open the primary flow and return isolating valves.

8.7 Electrical checks

(a) Inspect all electrical terminations for signs of over-heating.
(b) Check all terminations are tight.
(c) Check cable glands are tightened and grip cables securely.
(d) Replace all panels before re-starting system.

9.0 Fault Finding and Servicing

9.1 Fault Finding

The fault finding diagrams can be used to diagnose problems with the Electromax unit. These checks should be carried out by a competent installer or an authorized Heatrae Sadia service engineer or agent. A range of replacement parts (see section 9.2, page 37) is available should any major component be suspected as faulty. The instructions in section 9.3, page 39 detail how to remove and replace key components and assemblies. Observe all safety warnings before removing any components, if in doubt contact Heatrae Sadia for further advice.

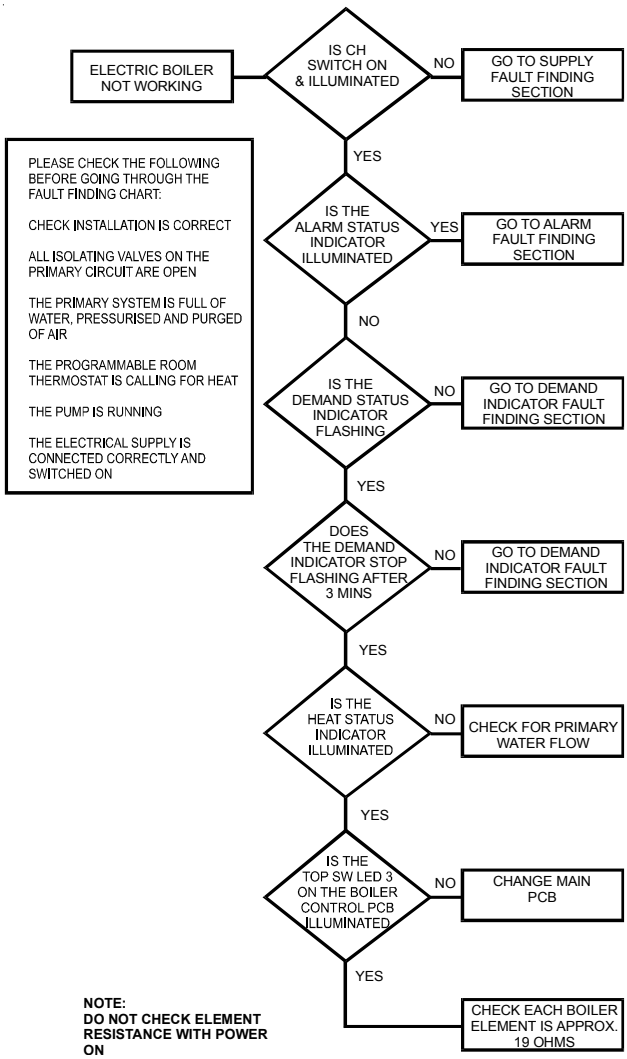

Diagram 22 Electric Boiler Fault Finding Master

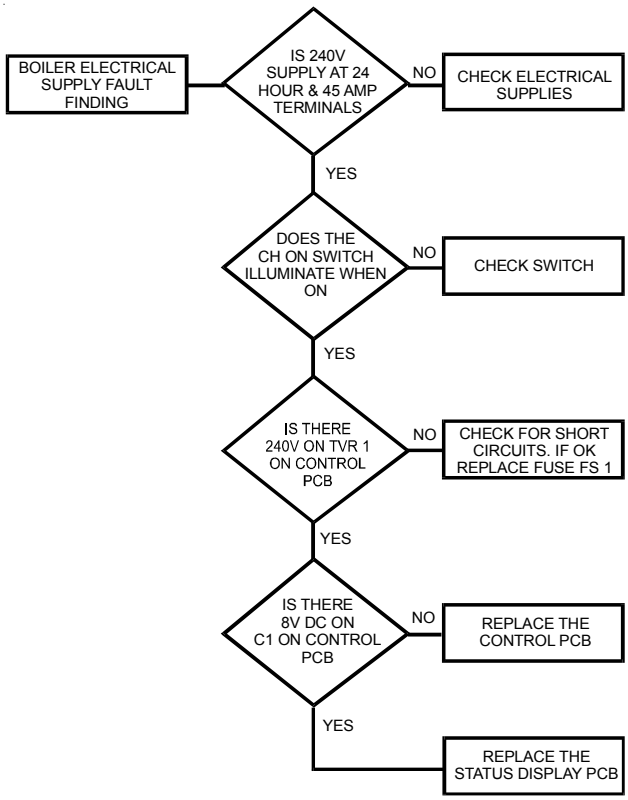

Diagram 23 Electric Boiler Fault Finding Supply Faults

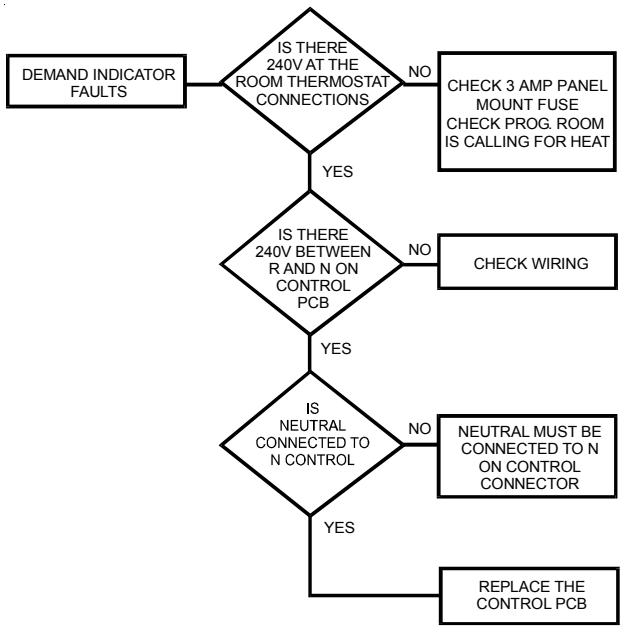

Diagram 24 Electric Boiler Fault Finding Demand Faults 1

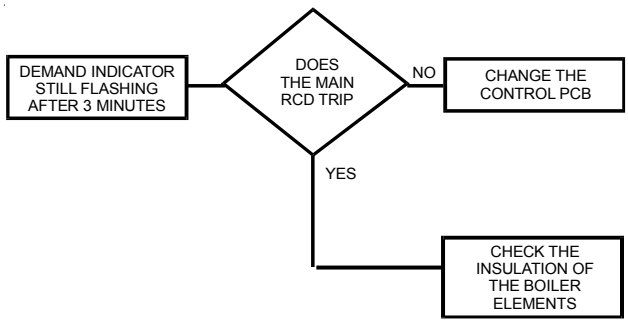

Diagram 25 Electric Boiler Fault Finding Demand Faults 2

Alarm Reset

To reset the unit after an ALARM condition:

a. Switch off the electrical supply

b. Correct the fault, check the system is full of water, is set to the correct pressure and there is a good flow of water around the primary circuit.

c. Switch the electrical supply back on.

Note

There are two different types of status display PCB's. When replacing them the underfloor status display PCB must be used on the Underfloor model, & the Radiator PCB with the Radiator Model. (see diagram 34, page 38)

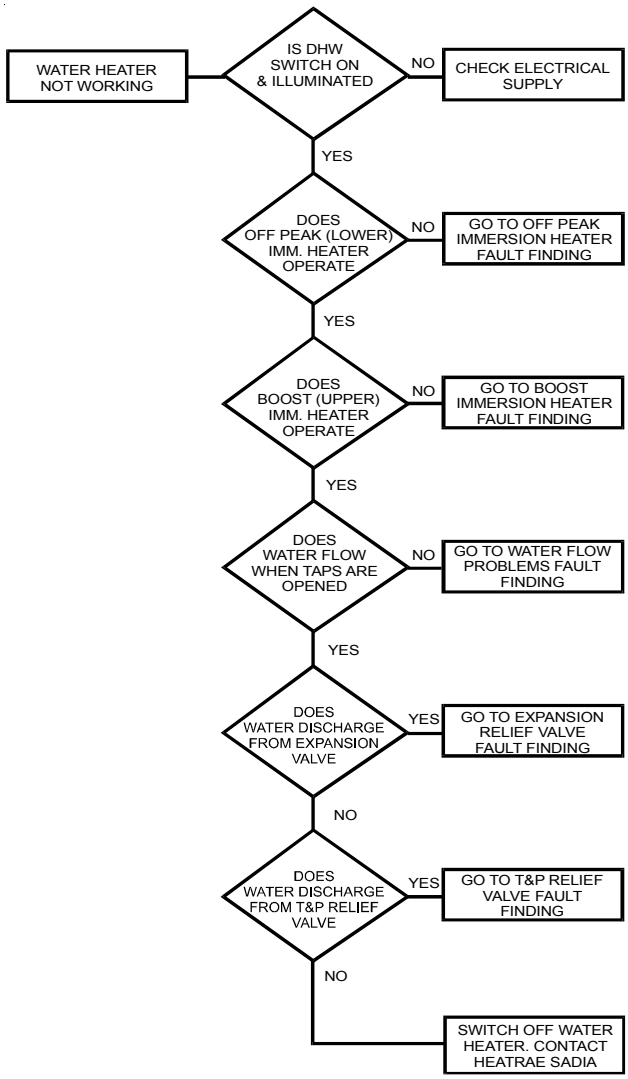

Diagram 26 Water Heater Fault Finding Master

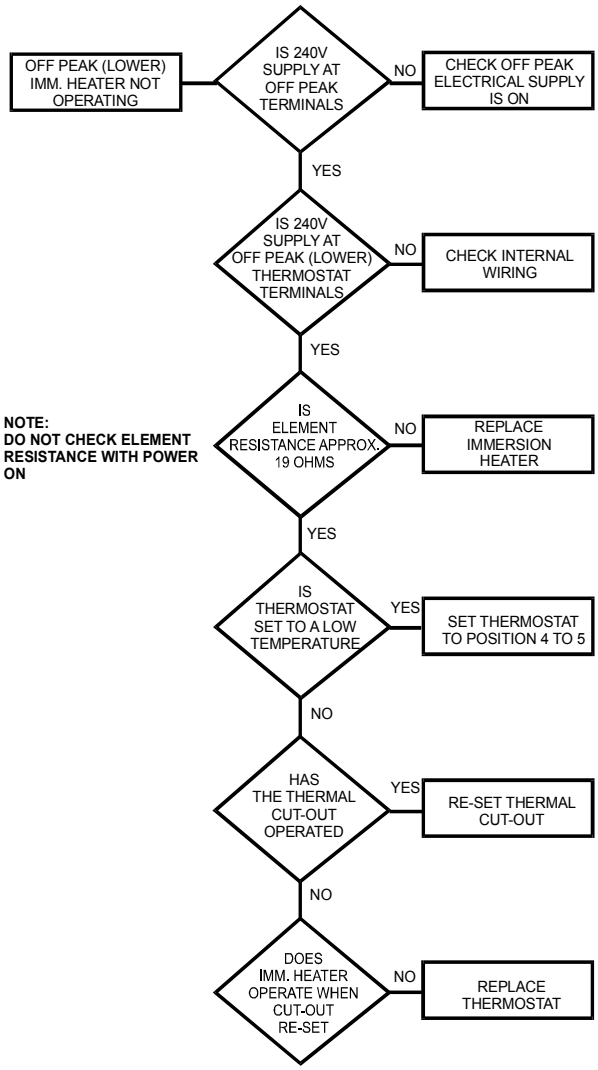

Diagram 27 Water Heater Fault Finding Off Peak (Lower) Immersion Heater Faults

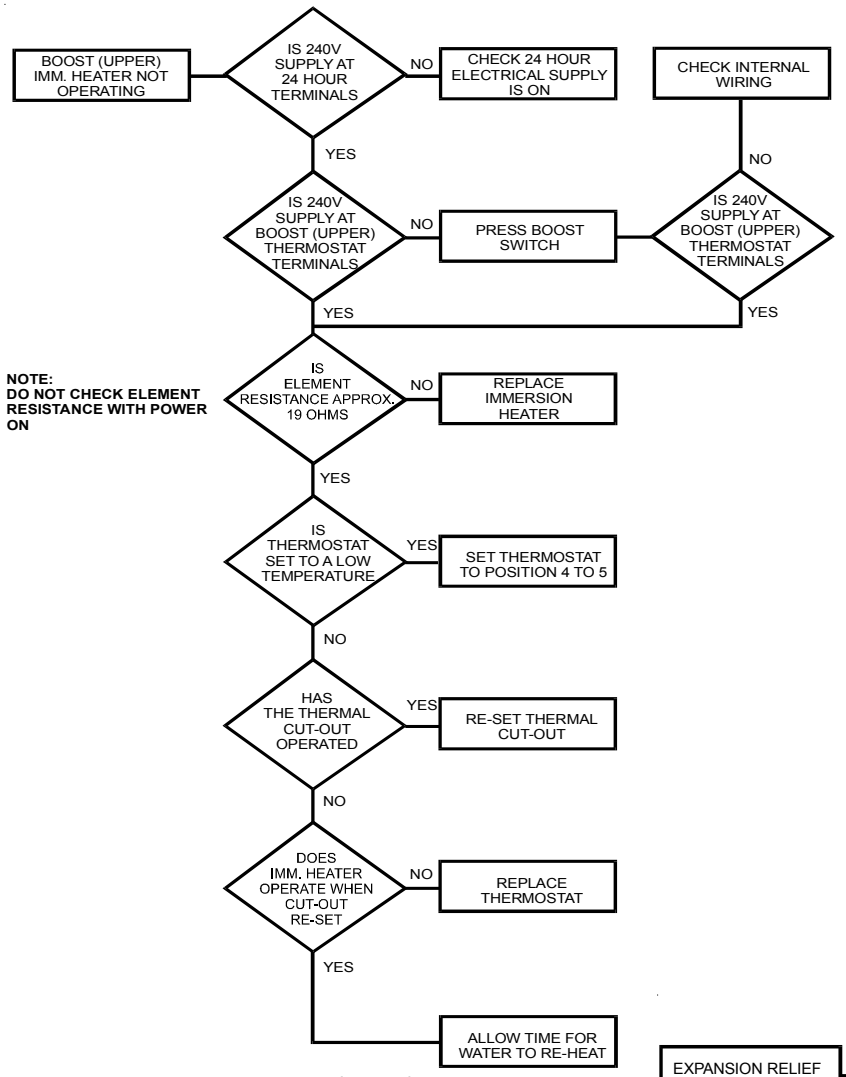

Diagram 28 Water Heater Fault Finding Boost (upper) Immersion Heater Faults

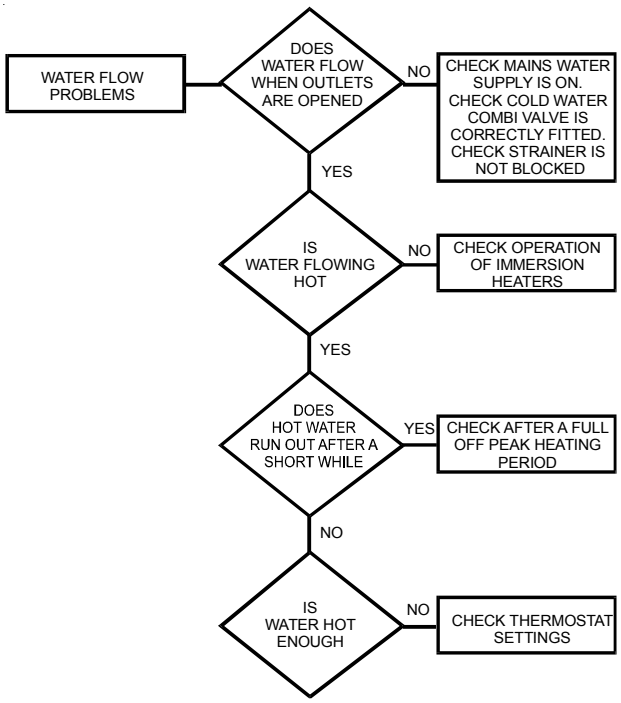

Diagram 29 Water Heater Fault Finding Water Flow Faults

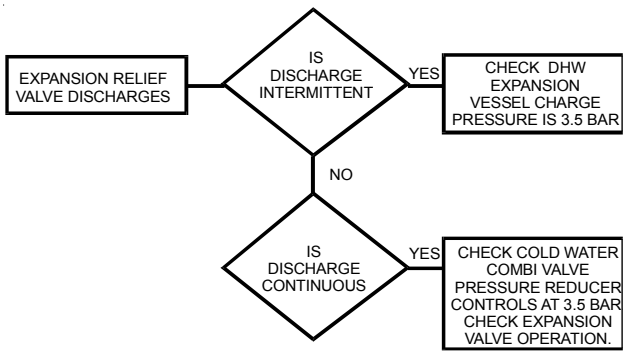

Diagram 30 Water Heater Fault Finding Expansion Valve Faults

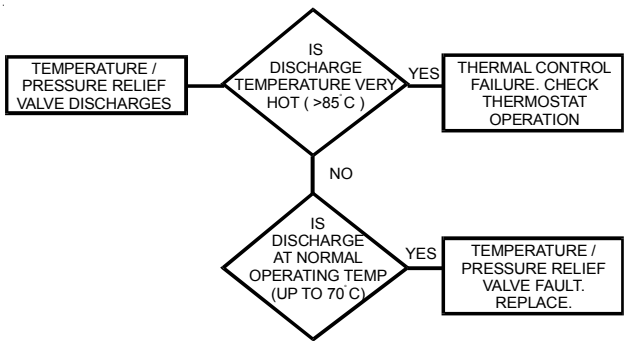

Diagram 31 Water Heater Fault Finding Temperature & Pressure Relief Valve Faults

9.2 Replacement Parts

A range of replacement parts is available for the Electromax unit. Refer to the following diagrams to aid in identifying the parts you require and the relevant Heatrae Sadia order code. Only use genuine Heatrae Sadia parts, the use of un-approved spare parts may render the warranty invalid. Parts should be replaced by a competent person or authorised Heatrae Sadia service engineers or agents.

Spares list

Description	Part Number
1. Expansion Vessel	95607034
2. Hose - expansion vessel	95607035
3. Pump	70 328 41
4. Top lid assembly	95614022
5. Electronics and surround panel	See Diagram 34
6. Boiler circuit protection lid	95614085
7. Central heating pres relief valve (3 bar)	95607036
8. Temperature and pressure valve	95605023
9. Element assembly	See Diagram 33
10. Tundish	95605838
11. Differential bypass valve	95605034
12. Filling loop assembly	95607039
13. 22mm Inlet connection - snapfit	95607040
14. Radiator shut off valves	95605035
15. Front panel assembly top (not shown)	95614028
16. Front panel assy bottom (not shown)	95614025
17. Pressure reducing valve (not show)	95605873
18. Cold control pack (not shown)	95605033
19 Expansion vessel (not shown)	95607864
20 Danfoss programmable room stat	95607044
21 Expansion valve cartridge - 6 bar	70 360 62
22 Pressure reducing cartridge - 3.5bar	70 360 63
23 Combination valve - complete	70 344 68

Electric boiler spares:

26 Main power PCB assembly (9kw)	95615080
27 Control PCB Assembly	7033894
28 Ribbon Cable	7034098
29 Fuse T 2A 240V	95612709
30 Temperature switch	95613628
31 Thermistor assembly	95612706
32 9kw heat exchanger	95608002
33 6kw heat exchanger	95608032
34 Cold water inlet pipe	95606003
35 Automatic air vent	95606050

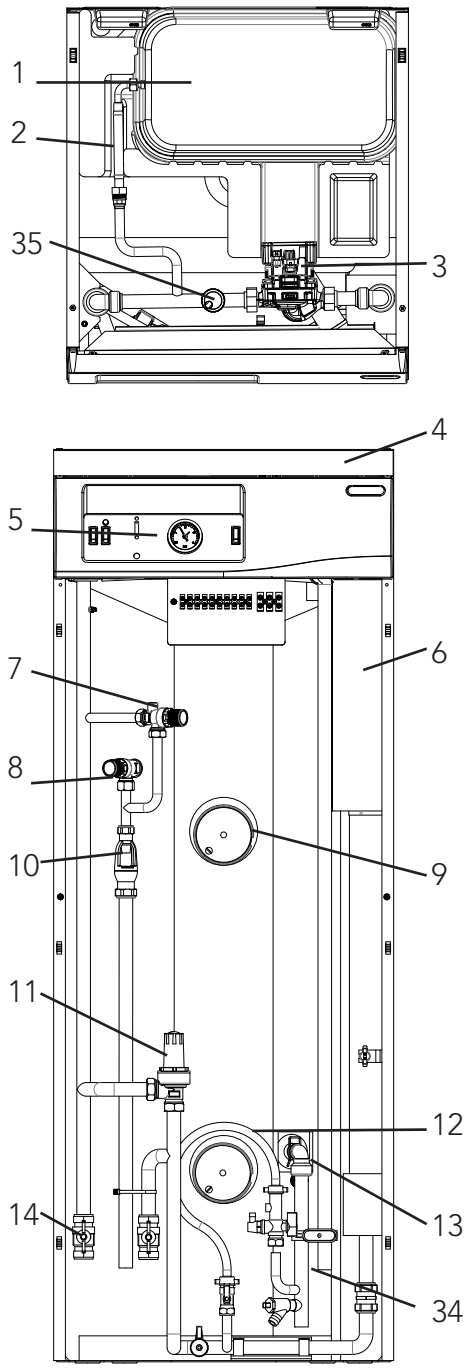

Diagram 32 - Product View

Spares list

Element Assembly Replacement Parts

Description	Part Number
1. Immersion heater (upper)	95606964
2. Immersion heater (lower)	95606963
3. Immersion heater gasket	70 351 65
4. Immersion heater backnut	95607869
5. Thermostat	95612023
6. Immersion heater cover	95614020
7. Key spanner (not shown)	95607861
8. Immersion heater - lower wire	95607324
9. Shroud	95606993

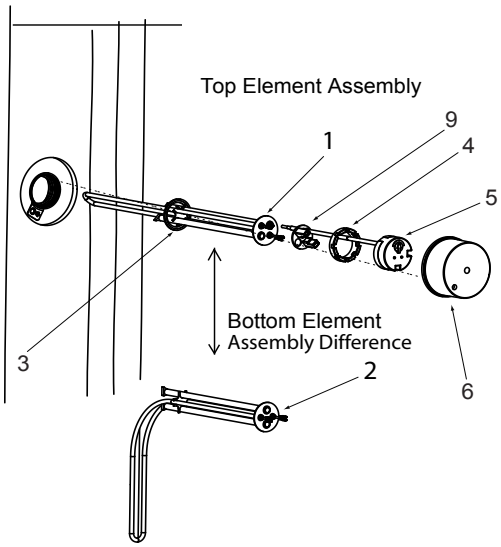

Diagram 33 - Element Assemblies

Electronics Assembly Replacement Parts

1. Complete controls assembly:	
Radiator model	7032843
Underfloor model	7032844
2. Green neon	95607033
3 Green switch	95613001
4. Black switch	95613002
5. System pressure gauge	95607032
6 Front fascia panel	95614026
7. Control PCB	
Radiator model	7032845
Underfloor model	7032846
8. Main PCB	95615065
9. Replacement 3 amp fuse	95612034
10. 3-way terminal block + wires	95607944

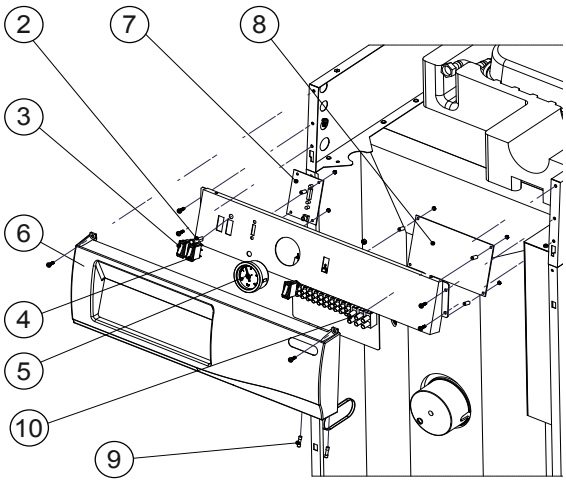

Diagram 34 - Electronics Asembly

9.3 Servicing

WARNING: DISCONNECT FROM ALL ELECTRICAL SUPPLIES BEFORE BEGINNING ANY WORK ON THE UNIT. THE WATER CONTAINED IN EITHER THE WATER HEATER CYLINDER OR THE PRIMARY HEATING CIRCUIT MAY BE VERY HOT – CARE MUST BE TAKEN TO AVOID SCALDING.

To remove any water carrying parts the system must first be drained. The water heater cylinder and primary circuit are not connected so must be drained separately. It is not necessary to drain the system for all servicing actions, those that require draining are indicated.

9.3.1 Draining the Electromax Primary Circuit

To avoid draining the complete primary radiator or underfloor circuit the Electromax primary circuit can be isolated by shutting off the primary circuit isolating valves fitted on the primary flow and return pipes (see diagram 15, page 25)

(a) Relieve the system pressure by twisting the red cap located on the primary pressure relief valve (see diagram 16, page 26). Observe the system pressure indicated on the primary system pressure gauge located on the fascia panel of the Electromax.
(b) Remove the sealing cap from the front of the primary drain valve (see diagram 20, page 30) and replace it with the hose connector supplied.
(c) Attach a hose to the hose connector and secure in place with a hose clip. Place the discharge point of the hose at a point below the level of the Electromax where the water drained will safely drain away.
(d) Open the primary drain valve and allow the water to drain from the Primary circuit.
(e) Water carrying parts attached to the Electromax primary circuit can now be removed. However, take care when removing parts as some residual water may still be contained and this may be very hot.

9.3.2 Draining the Electromax Water Heater Cylinder

(a) Turn off the mains water supply to the unit.
(b) Open a hot tap supplied by the Electromax to relieve the system pressure. Caution: some hot water will flow from the tap!
(c) Attach a hose to the hose connection on the drain point of the filling loop (see diagram 15, page 25). Place the discharge point of the hose at a point below the level of the Electromax where the water drained will safely drain away.
(d) Open the square headed drain screw (see diagram 15, page 25) and allow the unit to drain.

9.3.3 Removing the Automatic Air Vent (see diagram 35, page 40)

(a) Drain primary circuit.
(b) The automatic air vent is located on the pump body. It can be removed either with the pump fitted or removed.
(c) Unscrew the pump extension and remove assembly from pump body.
(d) Unscrew the automatic air vent from the pump extension.
(e) Replacement is a reversal of the above procedure. Ensure that the 'O' ring seals are correctly located before replacement.

9.3.4 Removing the Primary circulating pump (see diagram 35, page 40)

(a) Drain primary circuit.
(b) Unscrew top of pump electrical housing and remove by pulling upwards.
(c) Unscrew pump cable securing gland. Disconnect pump connections from terminals by pressing the spring loaded clips. Remove pump cable.
(d) Unscrew the union nuts from each end of the pump body and slide back along pipework.
(e) The pump can now be lifted from the unit.

(f) Replacement is a reversal of the above procedure. Ensure the pump sealing washers are correctly located before tightening union nuts. Ensure the correct electrical connections are made (Brown wire to "L" terminal, Blue wire to "N" terminal, Green/Yellow wire to ⏚ "EARTH CONNECTION" terminal). Secure the electrical cable by tightening the cable gland.

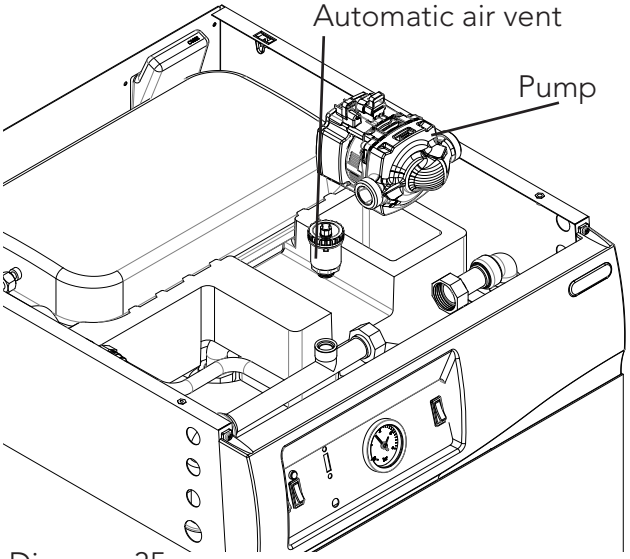

Diagram 35

9.3.5 Removing the Primary System Pressure Relief Valve (see diagram 36)

(a) Drain primary circuit.
(b) Unscrew the pressure gauge connection and remove from pressure relief valve body.
(c) Unscrew compression connections at inlet and outlet of the valve.
(d) Remove pressure relief valve.
(e) Replacement is a reversal of the above procedure. Ensure all connections are correctly made and tight.

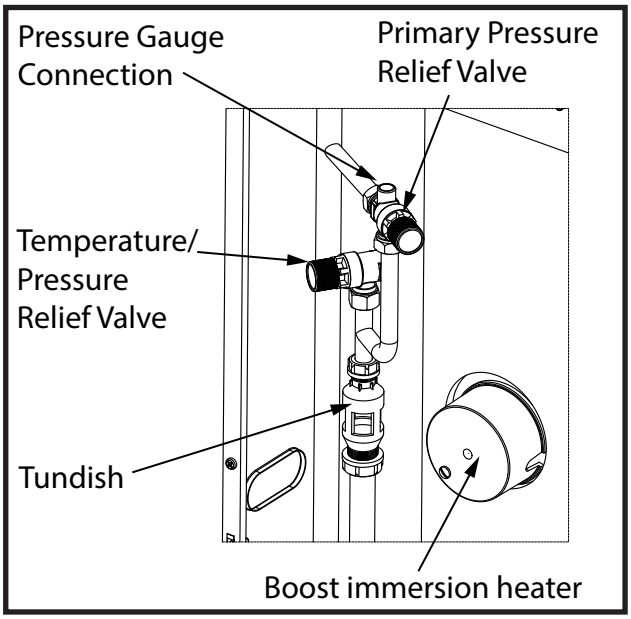

Diagram 36 Pressure Relief Valve Removal

9.3.6 Removing the Automatic Bypass Valve (see diagram 37)

(a) Drain primary circuit.
(b) Unscrew the compression connections at inlet and outlet of the valve.
(c) Remove the automatic bypass valve.
(d) Replacement is a reversal of the above procedure. Ensure all connections are correctly made and tight.

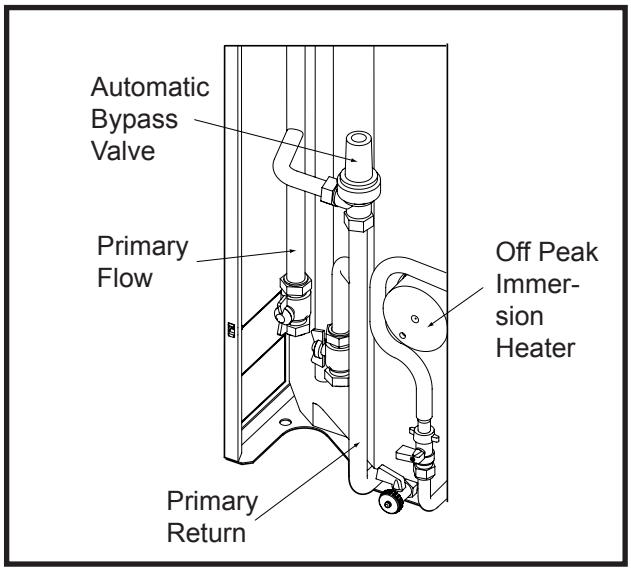

Diagram 37 Auto By-pass Valve Removal

9.3.7 Removing the Electric Boiler assembly (see diagram 38)

(a) Drain primary circuit.
(b) Remove cover from over the electric boiler control pcb.
(c) Disconnect cables from the terminal blocks and pull back through cable entry bush.
(d) Unscrew electric boiler control housing from right hand side panel.
(e) Unscrew the compression fitting from the lower (return) pipe to the electric boiler.
(f) Disconnect the "Push Fit" connection from the upper (flow) pipe from the electric boiler.
(g) The electric boiler assembly can now be removed. To aid removal lower the assembly until the control housing is approximately half way down the unit and slightly flex the right hand side panel outwards.
(h) Replacement is a reversal of the above procedure. Ensure cables are routed into the control housing through the cable entry bush. Ensure all electrical connections are correctly made (refer to wiring diagram 14, page 24) and tightened fully. Loose terminations can overheat and cause a fire hazard.

NOTE: Refer to main control PCB removal (page 43, 9.3.10) to replace PCB onto new boiler.

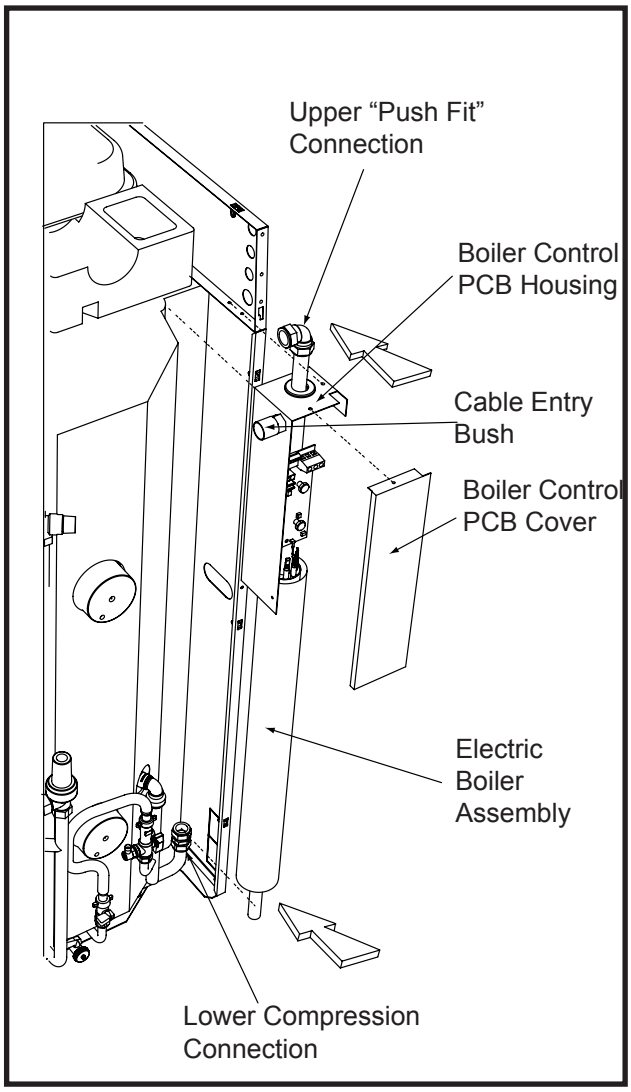

Diagram 38 Electric Boiler Removal

9.3.8 Removing the Primary System Expansion Vessel (see diagram 39)

(a) Drain primary circuit.
(b) Unscrew union nut at connection between the expansion vessel and the flexible hose coupling.
(c) Lift expansion vessel from moulded support nest. Note: the expansion vessel may contain some water, take care not to spill this into the product by lifting from the connection end of the vessel.
(d) Replacement is a reversal of the above procedure. Ensure vessel is inserted into support nest the correct way up with the air valve towards the top. Ensure sealing washer is correctly fitted.

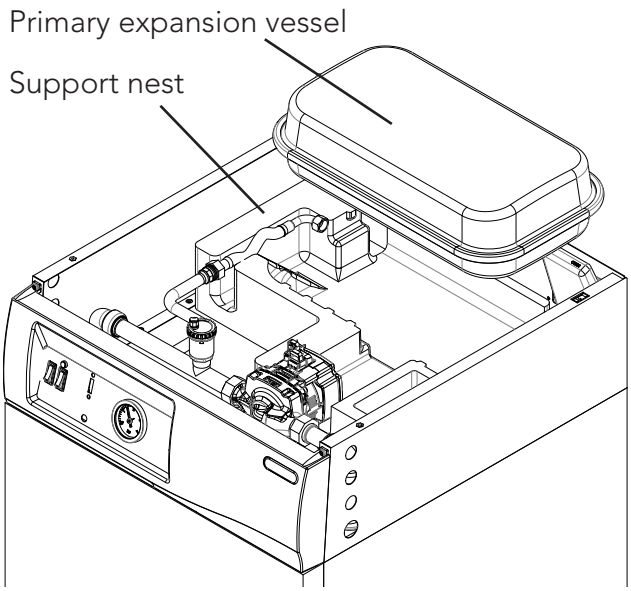

Diagram 39 Primary Expansion Vessel Removal

9.3.9 Removing the Immersion Heaters (see diagram 40)

(a) Drain DHW cylinder.
(b) Remove the immersion heater covers by unscrewing the securing screws.
(c) Disconnect the wiring from the immersion heater thermostats. Remove thermostats by carefully pulling outwards from the heaters. Remove the element shroud.
(d) Unscrew immersion heater backnuts using the key spanner supplied with the unit. Remove the immersion heaters. Over time the immersion heater gaskets may become stuck to the mating surface, to break the seal insert a round bladed screwdriver into one of the pockets on the immersion heater and gently lever up and down.
(e) Replacement is a reversal of the above procedure. Note: the upper and lower immersion heaters are of different configurations. The "right angled" element version should be used in the lower immersion heater boss, the "straight" element version should be used in the upper immersion heater boss. Ensure the "right angled" element is inserted into the lower boss so the element hangs vertically downwards towards the base of the unit.

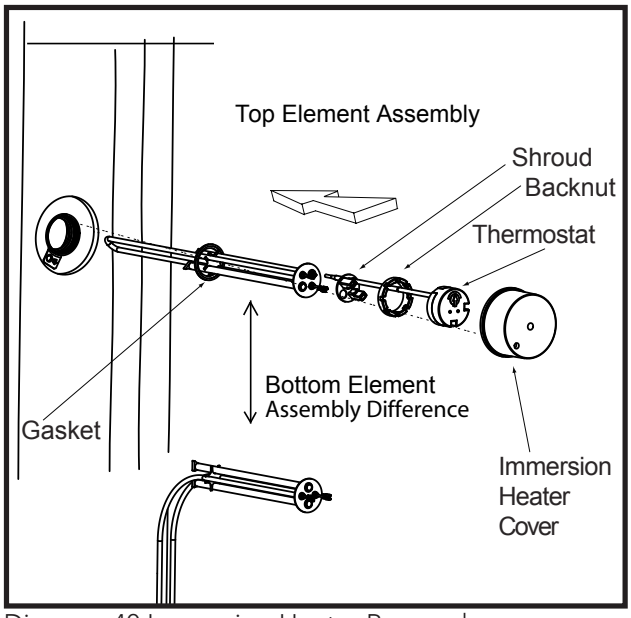

Diagram 40 Immersion Heater Removal

9.3.10 Removing the Electric Boiler Main Control PCB

(a) Remove cover from over the electric boiler control pcb (see diagram 43, page 44).
(b) Disconnect cables from the terminal blocks.
(c) Unplug ribbon cable connector CONN 2.
(d) Unplug the thermistor connector from CONN 4. Unplug the over-temperature cut-out connector from CONN 3.
(e) Remove the pcb securing screws (numbered 1 to 4 on diagram 41).
(f) Carefully remove the pcb assembly from the boiler pipework. This may be stiff and gentle prising from the top may be required.
(g) Disconnect the cables from the electric boiler element connections.
(h) Replacement is a reversal of the above procedure. Ensure the correct element connections are made. The element terminals are colour coded to correspond with the same colour connecting wires from the pcb, ensure they are connected to the correct elements. Ensure heat sink compound is applied to the underside of the heat sink. Refit the pcb tightening the fixing screws in the order indicated on diagram 41. Ensure all electrical connections are correctly made (refer to wiring diagram 14, page 24) and tightened fully. Loose terminations can overheat and cause a fire hazard.

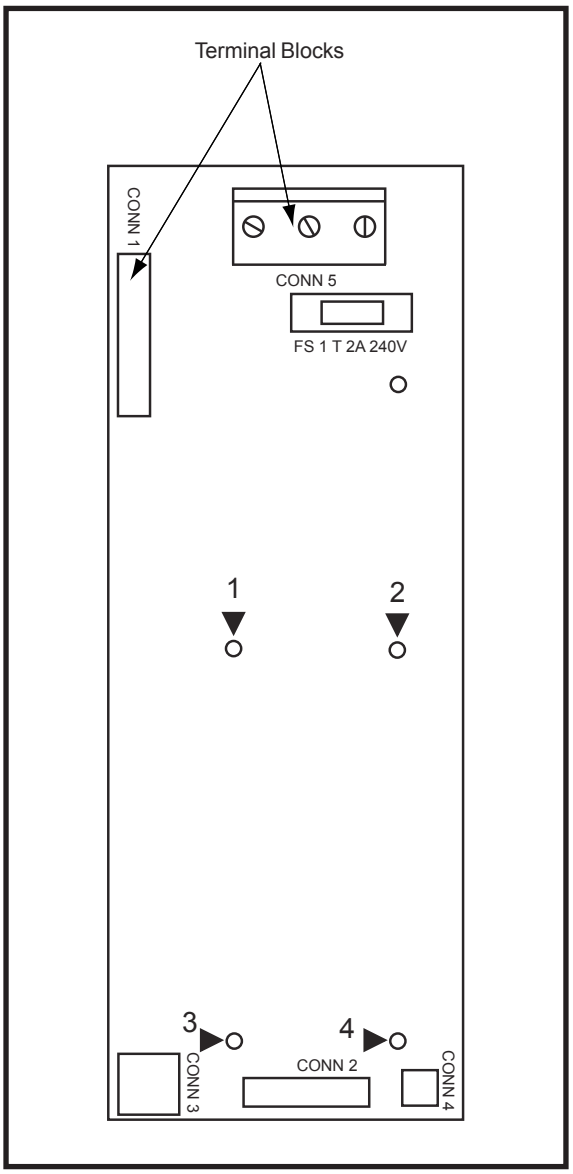

Diagram 41 Electric Boiler Control PCB

9.3.11 Removing the 3 amp Panel mounted fuses (see diagram 42)

(a) Remove fuseholder end cap from control assembly using screwdriver.
(b) Replace 3 amp fuse.
(c) Replace fuseholder end cap.

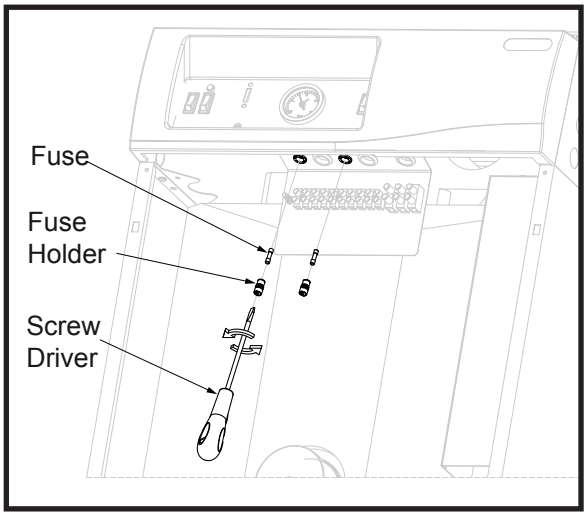

Diagram 42 Replacement 3 Amp Fuse

9.3.12 Removing the Front Fascia Panel (see diagram 43)

(a) Drain primary circuit.
(b) Unscrew the securing screws from the top of the front fascia moulding (note: these screws can only be accessed with the top panel removed).
(c) Push the front fascia moulding up slightly and then pull forward to remove.
(d) Disconnect all supply cables to the terminal blocks.
(e) Disconnect the earth bonding cable from the terminal adjacent to the teminal blocks.
(f) Disconnect internal wiring from the pump (see section 9.3.4, page 39) and the electric boiler (see section 9.3.7, page 41).
(g) Disconnect the pressure gauge connection from the primary system pressure relief valve (see section 9.3.5, page 40).
(h) Unscrew the four fixing screws securing the front fascia panel to the side panels and remove.
(i) The following components of the front fascia panel are replaceable: "Boost" immersion heater "ON" indicator neon, "Boost" immersion heater switch, "DHW ON" and "CH ON" switches, pressure gauge, boiler status pcb.

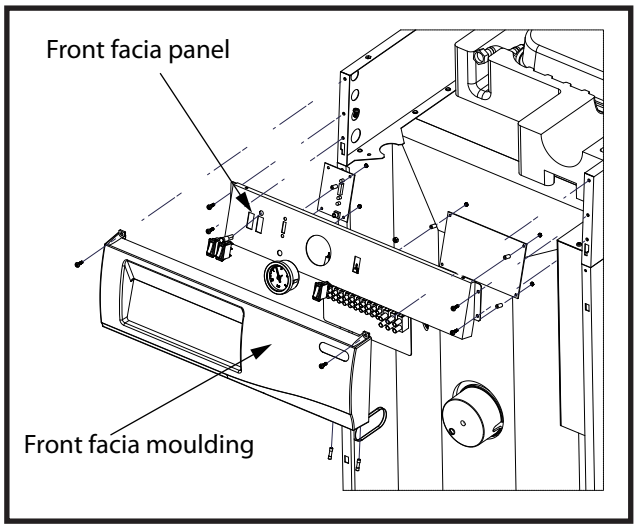

Diagram 43 Facia Panel Removal

9.3.13 Removing the Boiler Status Display PCB (located on the Fascia Panel) (see diagram 44)

(a) Unscrew the four securing nuts from the mounting pillars on the reverse of the fascia panel.
(b) Carefully remove the boiler status display pcb from the mounting pillars.
(c) Replace with new boiler status display pcb. Ensure that plastic spacers are located on the mounting pillars under the pcb. Ensure the nuts are equally tightened.
(d) Ensure the correct display PCB is fitted - an underfloor display PCB must be fitted to the underfloor Model. (see diagram 39, page 42)

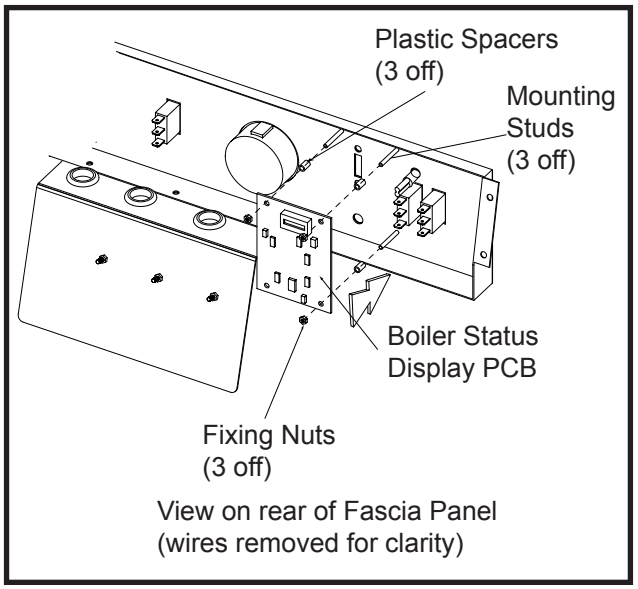

Diagram 44 Boiler Status Display PCB Removal

10.0 Guarantee

This product is guaranteed against faulty materials and manufacture. The following guarantee periods apply from the date of purchase:

Stainless steel cylinder	10 years
Electric boiler	2 years
DHW Expansion Vessel	5 years
All other valves, fittings and electrical parts	2 years

provided that:

- The unit has been installed in accordance with the Installation and service instructions and all relevant codes of practice and regulations in force at the time of installation, and that all necessary controls and safety valves have been fitted correctly.
- Any valves and controls fitted are of Heatrae Sadia recommended type and specification.
- The unit has not been modified or tampered with in any way and has been regularly maintained as detailed in these instructions.
- The domestic hot water cylinder has only been used for the storage of wholesome water as defined by the water supply (Water Fittings) Regulations 1999.
- The primary water circuit has been flushed and treated with a suitable inhibitor and is used only for domestic heating purposes.
- Within 60 days of installation the user completes and returns the guarantee

Registration card supplied with the unit in order to register the product.

The unit is not guaranteed against damage by frost and the immersion heaters are not guaranteed against excessive scale build-up.

Periodic loss of charge pressure from the expansion vessels is normal (indicated by an intermittent discharge of water from the expansion or primary pressure relief valves) and is not covered under the product guarantee.

This guarantee does not affect your statutory rights.

Environmental Information

This product is manufactured from many recyclable materials. At the end of its useful life it should be disposed of at a Local Authority Recycling Centre in order to realise the full environmental benefits.

Insulation of the DHW Cylinder is by means of an approved CFC/HCFC free polyurethane foam with an ozone depletion factor of zero and a Global Warming Potential (GWP) of 3.1.

WEEE Declaration

Disposal of Waste Equipment by Users in Private Household in the European Union.

This symbol on the product indicates that this product must not be disposed of with your other household waste. Instead, it is your responsibility to dispose of your waste equipment by handing it over to a designated collection point for the recycling of waste electrical equipment. The separate collection and recycling of your waste equipment at the time of disposal will help to conserve natural resources and ensure that it is recycled in a manner that protects human health and the environment. For more information about where you can drop off your waste equipment for recycling, please contact your local city office, your household waste disposal service or the company where this product was purchased.

MAINS PRESSURE HOT WATER STORAGE SYSTEM COMMISSIONING CHECKLIST

This Commissioning Checklist is to be completed in full by the competent person who commissioned the storage system as a means of demonstrating compliance with the appropriate Building Regulations and then handed to the customer to keep for future reference.

Failure to install and commission this equipment to the manufacturer's instructions may invalidate the warranty but does not affect statutory rights.

Customer Name _____ Telephone Number _____

Address _____

Cylinder Make and Model _____

Cylinder Serial Number

Commissioned by *(print name)* _____ Registered Operative ID Number _____

Company Name _____ Telephone Number _____

Company Address _____

_____ Commissioning Date _____

To be completed by the customer on receipt of a Building Regulations Compliance Certificate*:

Building Regulations Notification Number *(if applicable)* _____

ALL SYSTEMS PRIMARY SETTINGS (indirect heating only)

Is the primary circuit a sealed or open vented system?	Sealed ☐	Open ☐	
What is the maximum primary flow temperature?			°C

ALL SYSTEMS

What is the incoming static cold water pressure at the inlet to the system?				bar
Has a strainer been cleaned of installation debris (if fitted)?	Yes ☐	No ☐		
Is the installation in a hard water area (above 200ppm)?	Yes ☐	No ☐		
If yes, has a water scale reducer been fitted?	Yes ☐	No ☐		
What type of scale reducer has been fitted?				
What is the hot water thermostat set temperature?				°C
What is the maximum hot water flow rate at set thermostat temperature (measured at high flow outlet)?				l/min
Time and temperature controls have been fitted in compliance with Part L of the Building Regulations?		Yes ☐		
Type of control system (if applicable)	Y Plan ☐	S Plan ☐	Other ☐	
Is the cylinder solar (or other renewable) compatible?	Yes ☐	No ☐		
What is the hot water temperature at the nearest outlet?				°C
All appropriate pipes have been insulated up to 1 metre or the point where they become concealed		Yes ☐		

UNVENTED SYSTEMS ONLY

Where is the pressure reducing valve situated (if fitted)?			
What is the pressure reducing valve setting?			bar
Has a combined temperature and pressure relief valve and expansion valve been fitted and discharge tested?	Yes ☐	No ☐	
The tundish and discharge pipework have been connected and terminated to Part G of the Building Regulations		Yes ☐	
Are all energy sources fitted with a cut out device?	Yes ☐	No ☐	
Has the expansion vessel or internal air space been checked?	Yes ☐	No ☐	

THERMAL STORES ONLY

What store temperature is achievable?		°C
What is the maximum hot water temperature?		°C

ALL INSTALLATIONS

The hot water system complies with the appropriate Building Regulations	Yes ☐
The system has been installed and commissioned in accordance with the manufacturer's instructions	Yes ☐
The system controls have been demonstrated to and understood by the customer	Yes ☐
The manufacturer's literature, including Benchmark Checklist and Service Record, has been explained and left with the customer	Yes ☐

Commissioning Engineer's Signature _____

Customer's Signature _____

(To confirm satisfactory demonstration and receipt of manufacturer's literature)

*All installations in England and Wales must be notified to Local Authority Building Control (LABC) either directly or through a Competent Persons Scheme. A Building Regulations Compliance Certificate will then be issued to the customer.

benchmark COLLECTIVE MARK
THE MARK OF QUALITY FOR THE INSTALLATION, COMMISSIONING AND SERVICING OF DOMESTIC HEATING AND HOT WATER SYSTEMS

©Heating and Hotwater Industry Council (HHIC)

MAINS PRESSURE HOT WATER STORAGE SYSTEM COMMISSIONING CHECKLIST

This Commissioning Checklist is to be completed in full by the competent person who commissioned the storage system as a means of demonstrating compliance with the appropriate Building Regulations and then handed to the customer to keep for future reference.

Failure to install and commission this equipment to the manufacturer's instructions may invalidate the warranty but does not affect statutory rights.

Customer Name ______________________ Telephone Number ______________________

Address ______________________

Cylinder Make and Model ______________________

Cylinder Serial Number ______________________

Commissioned by *(print name)* ______________________ Registered Operative ID Number ______________________

Company Name ______________________ Telephone Number ______________________

Company Address ______________________

______________________ Commissioning Date ______________________

To be completed by the customer on receipt of a Building Regulations Compliance Certificate*:

Building Regulations Notification Number *(if applicable)* ______________________

ALL SYSTEMS PRIMARY SETTINGS (indirect heating only)

Is the primary circuit a sealed or open vented system?	Sealed ☐	Open ☐
What is the maximum primary flow temperature?		☐ °C

ALL SYSTEMS

What is the incoming static cold water pressure at the inlet to the system?			☐ bar
Has a strainer been cleaned of installation debris (if fitted)?		Yes ☐	No ☐
Is the installation in a hard water area (above 200ppm)?		Yes ☐	No ☐
If yes, has a water scale reducer been fitted?		Yes ☐	No ☐
What type of scale reducer has been fitted?			
What is the hot water thermostat set temperature?			☐ °C
What is the maximum hot water flow rate at set thermostat temperature (measured at high flow outlet)?			☐ l/min
Time and temperature controls have been fitted in compliance with Part L of the Building Regulations?			Yes ☐
Type of control system (if applicable)	Y Plan ☐	S Plan ☐	Other ☐
Is the cylinder solar (or other renewable) compatible?		Yes ☐	No ☐
What is the hot water temperature at the nearest outlet?			☐ °C
All appropriate pipes have been insulated up to 1 metre or the point where they become concealed			Yes ☐

UNVENTED SYSTEMS ONLY

Where is the pressure reducing valve situated (if fitted)?		
What is the pressure reducing valve setting?		☐ bar
Has a combined temperature and pressure relief valve and expansion valve been fitted and discharge tested?	Yes ☐	No ☐
The tundish and discharge pipework have been connected and terminated to Part G of the Building Regulations		Yes ☐
Are all energy sources fitted with a cut out device?	Yes ☐	No ☐
Has the expansion vessel or internal air space been checked?	Yes ☐	No ☐

THERMAL STORES ONLY

What store temperature is achievable?	☐ °C
What is the maximum hot water temperature?	☐ °C

ALL INSTALLATIONS

The hot water system complies with the appropriate Building Regulations	Yes ☐
The system has been installed and commissioned in accordance with the manufacturer's instructions	Yes ☐
The system controls have been demonstrated to and understood by the customer	Yes ☐
The manufacturer's literature, including Benchmark Checklist and Service Record, has been explained and left with the customer	Yes ☐

Commissioning Engineer's Signature ______________________

Customer's Signature ______________________

(To confirm satisfactory demonstration and receipt of manufacturer's literature)

*All installations in England and Wales must be notified to Local Authority Building Control (LABC) either directly or through a Competent Persons Scheme. A Building Regulations Compliance Certificate will then be issued to the customer.

benchmark COLLECTIVE MARK
THE MARK OF QUALITY FOR THE INSTALLATION, COMMISSIONING AND SERVICING OF DOMESTIC HEATING AND HOT WATER SYSTEMS

©Heating and Hotwater Industry Council (HHIC)

www.centralheating.co.uk

HEATRAE SADIA

SMARTER | CLEANER | WARMER

Electric Water Heating Co.
2 Horsecroft Place
Pinnacles
Harlow
Essex CM19 5BT
Tel: 0845 0553811
E-Mail: sales@ewh.co.uk

SPD
Special Product Division
Units 9 & 10
Hexagon Business Centre
Springfield Road
Hayes
Middlesex UB4 0TY
Tel: 020 8606 3567

Parts Center
Tel: 0344 292 7057
www.partscenter.co.uk

Newey & Eyre
Unit 3-5 Wassage Way
Hampton Lovett Ind. Estate
Droitwich, Worcestershire
WR9 0NX
Tel: 01905 791500
Fax: 01905 791501

UK Spares Ltd
Unit 1155
Aztec West
Almondsbury
Bristol BS32 4TF
Tel: 01454 620500

Alternatively contact your local supplying merchant or wholesale branch or use our online stockist finder at www.interpartspares.co.uk

SPECIFICATION ADVICE HOTLINE

t | 01603 420220 e | specifier@heatraesadia.com

AFTER SALES SERVICE

t | 0344 871 1535 e | customer.support@heatraesadia.com

w | heatraesadia.com

MADE IN THE UK

10 YEAR INNER CONTAINER WARRANTY 10

kiwa approved product

kiwa approved product

OUR NATIONWIDE NETWORK OF CUSTOMER SUPPORT ENGINEERS

Heatrae Sadia has its very own dedicated nationwide network of highly trained customer support engineers so you can have peace of mind that we're always here to help.

PRODUCT RANGE

Full specification details on all our products are available to download from our website.

To support our corporate responsibility and sustainability charters and reduce our printed material we encourage you to download product brochures from our website.

In designing these files we have taken into account the need to access data on screen.

If you would like to receive a printed copy of our full product catalogue please call our literature hotline on 01603 420127.

Heatrae Sadia Heating may introduce modifications to their products from time to time. Consequently, the details given in this brochure are subject to alteration without notice.

The HWA Charter's Code of Practice requires that all members adhere to the following:

- To supply fit for purpose products clearly and honestly described
- To supply products that meet, or exceed appropriate standards and building and water regulations
- To provide pre and post sales technical support
- To provide clear and concise warranty details to customers

Please follow us online:

hot water association CHARTER MEMBER

PN 7031656 Issue 08

© Heatrae Sadia 2015